NATIONAL OILWELL

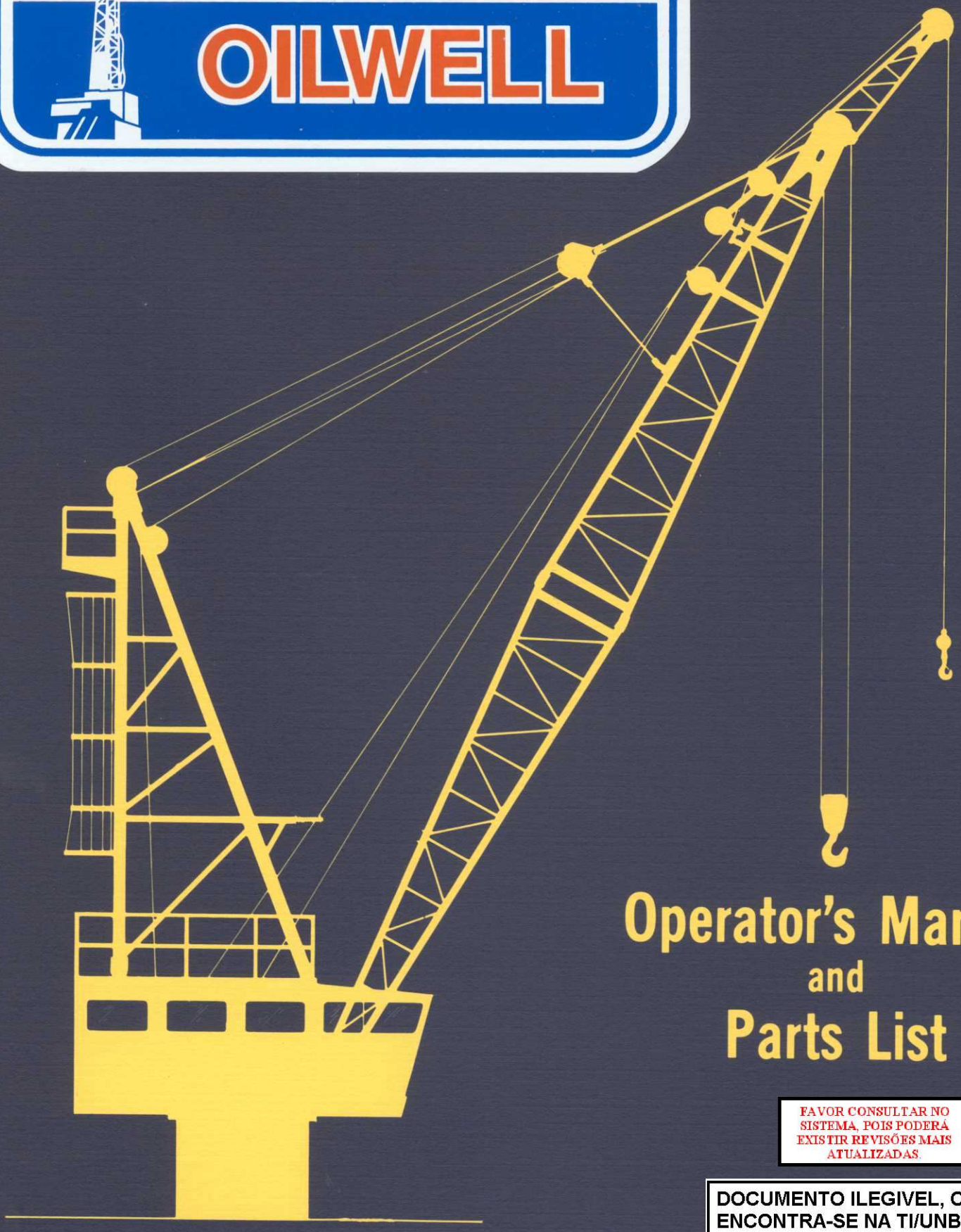

# Operator's Manual and Parts List

FAVOR CONSULTAR NO SISTEMA, POIS PODERÁ EXISTIR REVISÕES MAIS ATUALIZADAS.

DOCUMENTO ILEGIVEL, ORIGINAL ENCONTRA-SE NA TI/UNBC.

MA-SEMCVG-03581

OS-435

ZAPATA OFFSHORE COMPANY
THIS BOOK APPLIES TO
NATIONAL ORDER NO. 55E-15463-102
NATIONAL SUPPLY SPECIFICATION
X16-5148
S/N 344 & 345

P-25

BR E&P-BC/G XP/G DOC
25-5-93 Mylar

# FOREWORD

This manual has been compiled to assist in the operation and maintenance of the OS-435 pedestal crane. A great deal of effort was put into the development of this machine to assure ease of operation and maintenance.

There are, however, certain precautions that should be taken to assure safe operation and long trouble free service. We, therefore, urge the operator to become familiar with this manual before operating the crane.

NOTE: This manual applies only to cranes with serial no.'s above Serial No. 230.

NATIONAL OILWELL
P.O. BOX 4638
HOUSTON, TEXAS 77210–4638

As used herein, any references to National shall be deemed to mean National Oilwell.

*Copies of this manual have been furnished with each unit at time of shipment on a "No Charge" basis. A charge will be assessed on all requests for additional or replacement copies.*

# CRANE NOMENCLATURE

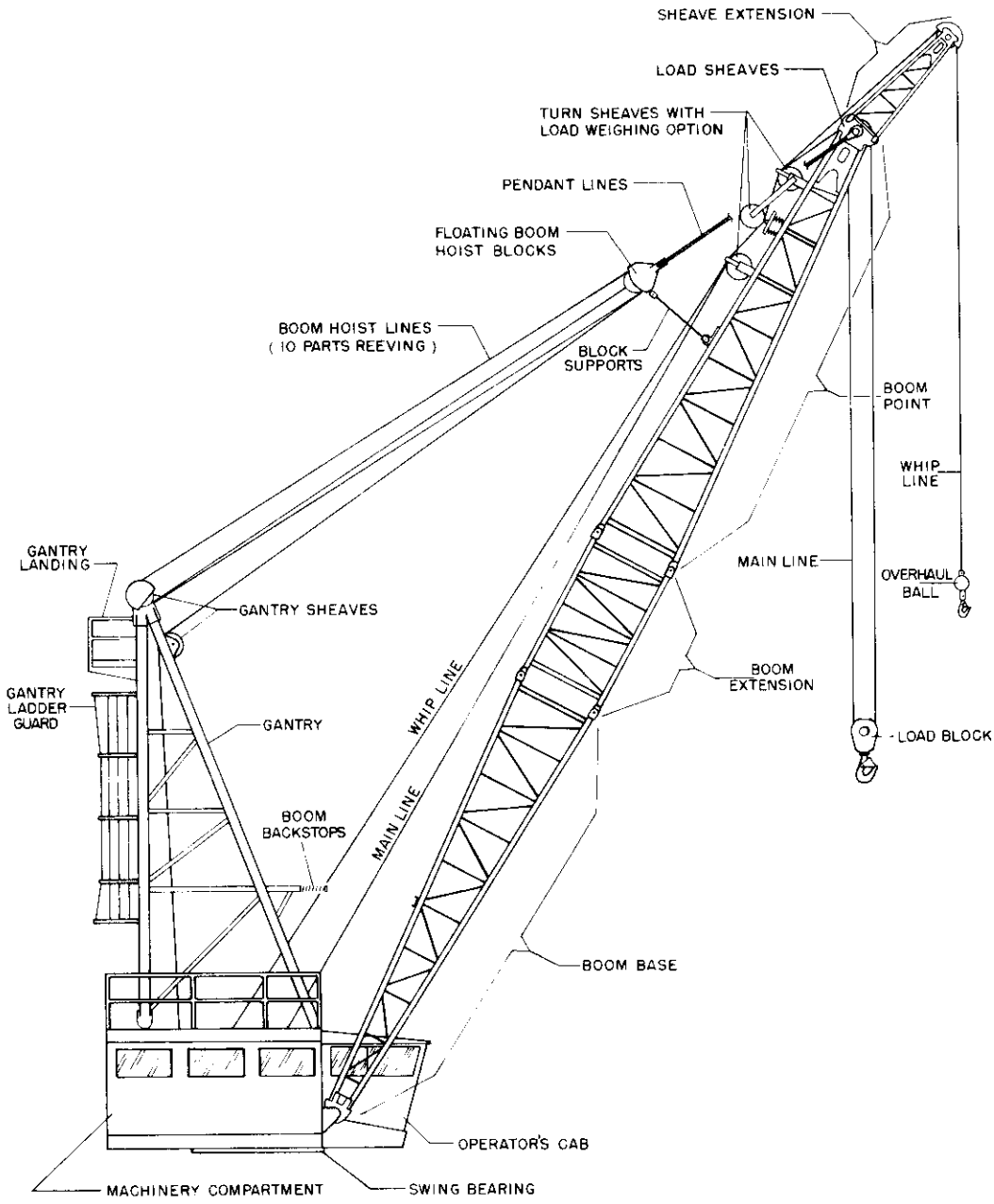


LT-160045

# TABLE OF CONTENTS


| | PAGE |
|---|---|
| Introduction | 1 |
| Safe Operating Practices | 2 |
| Inspection | 2 |
| Operating Instructions | 7 |
| Lubrication | 13 |
| Filters and Conditioners | 16 |
| Electrical Schematic for Caterpillar Engine Cranes | 22 |
| Electrical Schematic for Detroit Diesel Engine Cranes | 23 |
| Hydraulic Motor Compartment | 24 |
| Engine Compartment | 25 |
| Rear Cab Wall | 26 |
| Triple Pump Drive | 27 |
| Hydrostatic Drive | 29 |
| Hydraulic Control Circuit | 41 |
| Air Control System | 45 |
| Operation of the Primary Functions | 53 |
| Brakes | 57 |
| Swing Bearing Maintenance Requirements | 61 |
| Structural Maintenance | 61 |
| Over-Center Clutch | 63 |
| Boom Angle Limiter | 65 |
| Line Travel Limiter | 67 |
| Reeving and Wire Rope Specifications | 69 |
| Boom Hoist Block Supports | 72 |
| Wire Rope Maintenance and Inspection | 73 |
| Reading Schematics | 75 |
| Trouble Shooting - Control Pressure Circuit | 77 |
| Trouble Shooting - Pump Drive Housing | 77 |
| Trouble Shooting | 79 |
| Air Valve Repair, Maintenance and Operation | 85 |
| Hydrostatic Drive Trouble Shooting | 91 |
| Pump and Motor Replacement | 107 |
| Pump and Motor Repair | 108 |
| Emergency Load Lowering | 108 |
| Crane Start-Up Procedure after Storage or Shipping | 109 |
| Appendix | |

## INTRODUCTION

The OS-435 crane incorporates all the standard crane functions and utilizes a lattice type, wire line supported boom and high gantry permitting the reaching out with heavy loads and the use of long booms.

Here, however, is where the similarities end. The OS-435 is a pneumatically controlled hydraulic unit. Each hoist drum is powered by its own hydraulic motor powered by a variable displacement pump. This motor drives through a two stage planetary gear reduction that is completely enclosed within the drum.

The fluid flow to and from each motor is controlled so that the speed of any function (hoist, lower, swing) depends only on the engine speed and how far the control handle is moved from the neutral position. This provides the ultimate in smooth control and ease of operation.

The swing is a completely independent hydraulic circuit. It utilizes a variable displacement pump driving a fixed displacement motor. This motor drives the swing pinion through a totally enclosed three stage gear reduction.

This modern hydraulic approach greatly simplifies maintenance. Rather than one large complex piece of machinery, the hydraulic unit utilizes relatively small, completely independent modules. The modules can be easily removed for repair or replacement.

The OS-435 has only one friction clutch to adjust; this is the throw-out clutch between the prime mover and hydraulic pumps. All heavy braking is done hydraulically. The friction brakes are used only to hold the load while the control handles are in neutral. This provides for long brake life and rare need for brake adjustment.

The brakes and boom hoist lock pawl are spring set and pressure released. All hoist brakes release automatically when the control handles are moved out of the neutral position. All the hoist brakes and boom hoist lock pawl set automatically when the hoist control handles are returned to the neutral position.

A hydraulic drive provides for a more compact design. It also permits a more complete isolation of the operator's cab for more efficient sound and temperature control.

The main frame is of welded steel construction utilizing high strength steels in critical locations. Its deep beam design gives maximum rigidity with minimum weight.

## SAFE OPERATING PRACTICES

1. Know the weight of the load you are lifting.
2. Do not exceed the crane's load chart.
3. Check the weight of unfamiliar loads if within 10% of the load chart capacity.
4. Attach the load properly to the hook with slings or chains and balance the load.
5. Do not wrap the hoist rope around the load.
6. Before hoisting, check the wire rope for kinking or twisting.
7. Bring the hook over loads in such a manner as to prevent swing.
8. If there is a slack rope condition, it should be determined that the rope is properly seated on the drum and in the sheaves.
9. Move loads smoothly, without sudden acceleration or deceleration.
10. Do not allow personnel to ride the load or hook.
11. Avoid carrying loads over people.
12. Test the brakes each time a load approaching the rated load is handled.
13. Do not leave the crane unattended while a load is suspended.
14. The operator should respond to signals only from the appointed signal man, but should obey a stop signal at any time no matter who gives it.
15. Never allow fewer than three full wraps of wire rope on any drum.
16. Do not refuel crane with engine running.
17. A carbon dioxide, dry chemical, or equivalent fire extinguisher must be kept in the operator's cab or vicinity of the crane.

## INSPECTION

A sample inspection check list has been provided in order to acquaint an operator with the proper inspection of NATIONAL pedestal cranes. The inspection procedure has been divided into three general groups based upon intervals at which inspection should be performed. The three inspection intervals are: daily, weekly, and monthly. These intervals are recommended for normal operation, but may be adjusted to the customer's operating conditions.

If adjustments or repairs are found to be necessary from an inspection, the inspector should promptly notify the proper personnel to assure problem correction. The crane operator of the next shift should also be notified of the defect if the problem has not been corrected prior to the shift change.

Inspection records should be signed and dated by the inspector, and kept available for future reference as recommended by the American Petroleum Institute.

## INSPECTION CHECK LIST — DAILY

CRANE SERIAL NUMBER_____ DATE INSPECTED_____

NO. OF CRANE OPERATING HOURS_____ INSPECTED BY_____

| DAILY PROCEDURE | CONDITION | | COMMENTS |
|---|---|---|---|
| | O.K. | *Correction Required | |
| 1. CHECK FOR AND ELIMINATE SPILLAGE OF FLAMMABLE MATERIALS SUCH AS FUEL & OIL. | | | |
| 2. Service engine, checking water and oil levels, and air cleaner. | | | |
| 3. Check engine fuel tank level. | | | |
| 4. Check hydraulic oil tank level. | | | |
| 5. Lubricate boom foot bushings. | | | |
| 6. Check operation of horn. | | | |
| 7. Start engine and allow to warm up at idle speed. Check engine gages. | | | |
| 8. Check clutch operation. | | | |
| 9. Engage clutch and allow hydraulic oil to warm up at idle speed. | | | |
| 10. Observe charge pressures to see if they are in proper operating range, 160/300 psi (11/20.7 bar). | | | |
| 11. Observe control pressure to see if it is in the proper operating range, 700/750 psi (48.3/51.7 bar). | | | |
| 12. Observe the triple pump drive lube oil gage to see if it is in the proper operating range, 20/40 psi (1.4/2.8 bar) at 1800 RPM. | | | |
| 13. Check swing, boom, and hoist control handles for adjustment and for proper centering when released. | | | |
| 14. Check air regulator to see if it is in the proper operating range, 95/100 psi (6.6/6.9 bar). | | | |
| 15. Drain moisture from air receivers. | | | |
| 16. Check all "brake-off" indicators. | | | |
| 17. Operate emergency brake set to assure its operation. | | | |
| 18. Visually inspect all running wire rope and check all drums for proper spooling. | | | |
| 19. Check for leakage or deterioration of components in hydraulic and pneumatic systems. | | | |
| 20. Observe condition of pump suction line filter at engine speed of 1800 RPM. | | | |
| 21. Check boom pins and gantry leg pins for missing or dislocated cotter pins. | | | |
| 22. Check condition of high pressure in-line filters by depressing red button on filter while powering down at full speed. If button pops out, replace element. | | | |

*When a checkmark has been placed under the "correction required column for a certain procedure, corrective work must be performed. After correction of the defect, the date and initials of the person making the correction are to be placed in the o.k. column of the procedure in question.

INSPECTION CHECK LIST — WEEKLY AND MONTHLY

CRANE SERIAL NUMBER_____ DATE INSPECTED_____

NO. OF CRANE OPERATING HOURS_____ INSPECTED BY_____

| WEEKLY PROCEDURE | CONDITION O.K. | CONDITION *Correction Required | COMMENTS |
|---|---|---|---|
| 1. Lubricate crane per instructions in operator's manual. | | | |
| 2. Check oil levels of all shaft assemblies, swing gear housing, triple pump drive. | | | |
| 3. Check boom saver system for proper operation. | | | |
| 4. Check boom angle limiter system for proper adjustment (adjustment must be set to prohibit boom angles greater than 80°.) | | | |
| 5. Check boom hoist lock pawl for correct engagement and disengagement with ratchet wheel teeth. | | | |
| 6. Check brakes for adjustment and excessive wear of lining, loose or missing components and contamination by lubricants. | | | |
| 7. Check electrical apparatus such as lights and switches for malfunction or signs of deterioration. | | | |
| 8. Check air line lubricator oil levels. | | | |
| 9. Check clutch adjustment. | | | |

| | CONDITION O.K. | CONDITION *Correction Required | COMMENTS |
|---|---|---|---|
| 1. Thoroughly inspect all wire rope and pendant lines for deterioration such as: reduction of rope dia.; broken and worn outside wires; corroded and cracked end connections and severe kinking, crushing and unstranding of wires. | | | |
| 2. Check hooks for cracks and deformation. | | | |
| 3. Inspect boom for deformed, cracked, corroded or missing members. | | | |
| 4. Inspect gantry for deformed, cracked, corroded or missing members. | | | |
| 5. Inspect main frame for deformed, cracked, or corroded members. | | | |
| 6. Check for loose bolts on hydraulic pumps and motors, swing bearing, gantry, swing gear reducer, and shaft assemblies. | | | |
| 7. Inspect sheaves for cracks, exessive wear, and that they operate freely. | | | |
| 8. Inspect all load, angle and weight indicating systems over their full range for significant inaccuracies. | | | |
| 9. Check for worn, cracked, distorted, or dislocated boom pins, wire rope rollers, and swing bearing gear teeth. | | | |
| 10. Check triple pump drive chain for excessive stretch, and chain sprockets for wear. | | | |

*When a checkmark has been placed under the "correction required" column for a certain procedure, corrective work must be performed. After correction of the defect, the date and initials of the persons making the correction are to be placed in the o.k. column of the procedure in question.

OPERATOR'S CAB

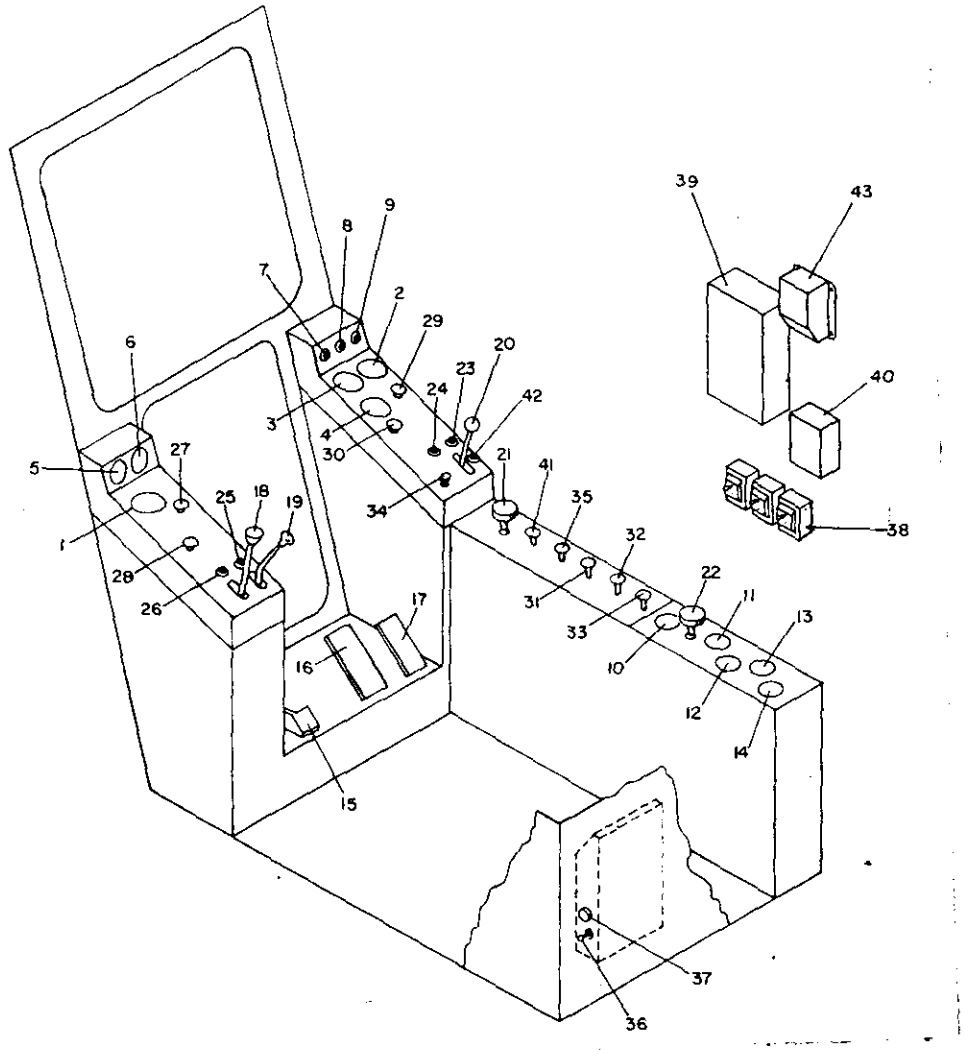


LT-160509

Figure 1

1. Engine Tachometer
2. Boom Hoist Pressure Gage
3. Swing Pressure Gage
4. Main Hoist Pressure Gage
5. Engine Water Temperature Gage
6. Engine Oil Pressure Gage
7. Triple Pump Drive Low Lube Pressure Indicator
8. Low Hydraulic Tank Fluid Level Indicator
9. Air Supply Low Pressure Indicator
10. Control Air Pressure Gage
11. Control Pressure Gage
12. Swing Charge Pressure Gage
13. Boom Charge Pressure Gage
14. Main/Whip Charge Pressure Gage
15. Boom Hoist Control Pedal
16. Foot Brake Pedal
17. Foot Throttle Pedal
18. Swing Control Handle
19. Boom Hoist Control Handle
20. Main/Whip Hoist Control Handle
21. Hand Throttle Control
22. Control Air Pressure Regulator
23. Whip Hoist "Brake Off" Indicator
24. Main Hoist "Brake Off" Indicator
25. Boom Hoist "Brake-Off" Indicator
26. Swing Hoist "Brake-Off" Indicator
27. Emergency Brake Set Valve
28. Swing Brake Control Valve
29. Emergency Load Release Valve
30. Main/Whip Hoist Selector Control Valve
31. Engine Start Valve
32. Engine Kill Valve
33. Low Boom Limit Override Valve
34. Horn Valve
35. Clutch Control Valve
36. Cab Heater Power Switch
37. Cab Heater Thermostat Switch
38. Boom, Beacon, Frame, and Cab Light Switches
39. Electrical Circuit Breaker Cabinet
40. Electrical Component Box
41. Main and Whip Hoist (Hook) High Speed Selector Valve
42. Main and Whip Hoist High Speed Indicator
43. Transformer

NOTES

## OPERATING INSTRUCTIONS

When the crane is transporting loads, the engine speed should be at least 1500 RPM. Maximum engine speed is 1800 RPM. Minimum engine idle speed is 1000 RPM.

Figure 1 shows a view of the operator's cab and controls. These controls have been grouped for ease of operation and to offer the operator a desirable field of vision.

### SWING

The outside lever (18) on the left hand console operates the crane swing system. To swing the upper works to the right, the lever (handle) is moved forward, away from the operator. To swing left, the lever is moved toward the operator. At a given engine RPM the swing speed depends on how far the control lever is moved from its neutral position. A valve (28) in the console is used to set or to release the swing brake. An indicator (26) turns amber to inform the operator when the brake is released.

### BOOM HOIST

The boom hoist shaft assembly is the rear winch on the crane and is controlled by the inside lever (19) on the left hand console. This lever is moved forward, away from the operator, to lower the boom and is moved toward the operator to raise the boom. At a given engine RPM the speed of booming (luffing) depends on how far the control lever is moved from its neutral position. The boom hoist brake and lock pawl set automatically when the control lever is returned to its neutral position. An indicator (25) turns amber to inform the operator when the brake and lock pawl are released.

The boom hoist can also be operated with the left foot using the rocker pedal (15) on the floor. This method of operating leaves the operator's left hand free to operate the swing controls while booming.

The boom is equippped with an automatic stop for the high and low elevations. This stop should be checked periodically for proper operation. When the stop is activated the control lever will only move the boom away from the stop.

### MAIN AND WHIP LINE HOISTS

The main hoist shaft assembly is the front winch on the crane and the whip line hoist is the center winch. These winches are controlled by the lever (20) on the right hand console. A two position valve (30) selects which hoist is to be operated. The valve is pushed for the main hoist and pulled to use the whip hoist. The main and whip line hoists cannot be operated simutaneously. The control handle is pulled toward the operator to raise the load and pushed forward to lower the load. The main and whip hoist brakes set automatically when the lever is returned to its neutral position. Indicators (23) and (24) turn amber to inform the operator when the brakes are released.

NOTE: The hoist selector control valve (30) MUST NOT be shifted while hoisting or lowering a load. Only when the control handle (18) is in neutral should an operator switch from one winch to another. This precaution must be observed by the operator to prevent possible pressure surges or loss of load control from damaging the hydraulic motors.

### MAIN AND WHIP LINE HOIST SPEED SELECTOR AND INDICATOR

Both the main and whip line hoists are equipped with two-speed motors for low speed high torque, or high speed, low torque operation. The "hook speed selector valve" (41) is used for both the main and whip hoist motors. The valve is pulled for high speed and pushed for low speed.

The main and whip hoist high speed indicator (42), in the right hand control panel, will be amber whenever the main and whip hoist motors are in the high speed, low torque position (hoist speed selector valve (41) is in the "up" position).

CAUTION: DO NOT change speeds while hoisting or lowering a load. If the hoist pressure exceeds 3500 psi, the main/whip control handle should be returned to neutral and the speed selector valve pushed for "low" speed.

## EMERGENCY BRAKE SET

The emergency brake set valve (25) is located on the left hand console. To set all hoist brakes and boom hoist lock pawl, push this valve. To reset for normal operation, pull the valve up.

## EMERGENCY LOAD RELEASE

The emergency load release valve (29) is located on the right hand console. To release a load, push this valve. To reset for normal operation, pull this valve up.

CAUTION: This valve should ONLY be used in emergency situations to release a load. Indiscriminate use of this valve may cause damage to the main or whip hoist hydraulic motors.

## ENGINE GAGES

The engine gages are located on the left hand console panel. These are the oil pressure gage (6), engine water temperature gage (5) and the engine tachometer (1). These gages should be checked periodically for correct readings as specified in the engine manual. The minimum engine speed reading on the tachometer should be 1000 RPM and the maximum should be 1800 RPM. If a gage shows an incorrect reading, immediately shutdown the engine and determine the cause to prevent possible engine or hydraulic system damage.

## HYDRAULIC FLUID TANK LEVEL

A safe hydraulic tank level is demonstrated by the indicator (8), on the right hand console panel, displaying "green". The indicator should be checked periodically during operation. If the hydraulic tank level indicator turns "red" during operation, the quantity of hydraulic fluid has reduced to a critical level. The reduction of fluid quantity is caused by leakage. The leak should be located and repaired promptly. DO NOT operate the crane when the indicator is red.

The hydraulic fluid must always be kept CLEAN and at the proper level to assure reliable operation of the crane's hydraulic system. If the presence of water or emulsification in the fluid is noticed, or if the fluid color turns dark brown, the fluid should be changed as soon as possible.

The capacity of the hydraulic tank is 60 gallons (227 litres).

## FUEL TANK LEVEL

The fuel tank level is checked with sight glasses installed in the wall of the tank. The capacity of the fuel tank is 130 gallons (492 liters).

## KILL VALVE

The kill valve (32), located on the right-hand engine panel, shuts off all the cab controls and kills the engine. Prior to starting the engine this valve must be pulled up. To kill the engine, this valve is pushed down.

START VALVE

The start valve (31) is located on the right hand engine panel. To start the engine first pull the kill valve (32) up. Pull up on the engine start valve to permit compressed air to pass to the engine's air starter. Release the start valve immediately after the engine starts. Refer to the engine manual for additional starting instructions.

ENGINE THROTTLE CONTROLS

The engine speed is controlled by an air throttle system consisting of a hand operated valve (21) and a foot operated valve (17) working in conjunction by means of an air shuttle valve. The hand operated valve may be set to any desired operating speed. When transporting loads, the hand throttle should be set for a minimum engine RPM of 1500. The foot throttle can then be used when the operator wishes to temporarily increase engine speed.

CLUTCH OPERATION

A pneumatically operated, over-center, gear tooth clutch is installed between the engine and the triple pump drive assembly. The clutch should be engaged only at low engine idle speed to prevent overheating and excessive lining wear. To engage the clutch pull up on the clutch control valve (35) and hold for approximately five seconds. To disengage the clutch, push down on the clutch valve and hold for approximately two seconds.

HYDRAULIC SYSTEM GAGES

Three pressure gages located on the right hand control panel indicate the pressures of the cranes hydraulic circuits. The "MAIN" gage (4) indicates the pressure required for operating the main or whip line hoist. The "BOOM" gage (2) indicates the pressure required for operating the boom hoist. The "SWING" gage (3) indicates the pressure required to swing the crane. The "MAIN", "BOOM" and "SWING" gages should register approximately zero pressure with the control handles in the neutral position. Under normal operating conditions the pressure registered by the above gages should not exceed 3500 psi (241.4 bar).

The three charge pressure gages, located in the right hand rear panel, indicate the pressures required to insure safe operation of the hydraulic systems. The "BOOM" charge pressure gage (13) indicates the pressure generated by the boom pump charge pump. The "MAIN" charge pressure gage (14) indicates the pressure generated by the main/whip pump charge pump. The "SWING" charge pressure gage (12) indicates the pressure generated by the swing pump charge pump. These gages should register pressure varying between 160 and 300 psi (11/20.7 bar). The pressure generally will increase with engine RPM. Should the charge pressure not fall within these limits, a problem may exist with the hydrostatic transmission.

The "control pressure" gage (11) indicates the discharge pressure of the control pressure pump. For proper brake operation, the control pressure must be from 700 to 750 psi (48.3 to 51.7 bar).

AIR PRESSURE REGULATOR AND GAGE

The air pressure regulator (22) and gage (10) are located in the right hand rear panel. The regulator should be adjusted to maintain an air pressure between 95 and 100 psi (6.6 and 6.9 bar).

BRAKE PEDAL

A foot brake pedal (16) is provided in the cab for setting the main and whip hoist brakes. This brake pedal is primarily used for "running in" new brake linings. It may also be used for drying wet brake linings or removing rust from the brake drum by depressing the pedal while hoisting an empty hook. The brake pedal also provides the operator with control of a load when the emergency load release function is actuated.

LOW BOOM LIMIT OVERRIDE

The low boom limit override valve (33) is located in the right-hand engine control panel. This valve allows the operator to lower the boom below the limit established by the low boom angle limiter system. This valve must be pulled up and held to lower the boom. The air horn will sound as long as this valve is held up.

NOTE: This valve is provided to permit the boom to be placed in a rest. Caution should always be exercised when using this valve and the maximum negative boom angle of five degrees (5°) should never be exceeded. This system is only to be used when no load is suspended from the hook or block.

HORN VALVE

The horn valve (34) is located on the right hand console control panel. This valve is pushed to sound the air horn.

TRIPLE PUMP DRIVE HOUSING LUBRICATION PRESSURE AND WARNING INDICATOR

Located at the rear of the pump drive housing is a gage (Fig. 13) for indicating the pressure of the oil used to lubricate the triple pump drive's gears and bearings. With the clutch engaged, the lube (lubrication) oil warm and the engine set at 1800 RPM, this gage should indicate a pressure of 20 to 60 psi (1.4 to 4.1 bar).

The "triple pump drive low lube pressure indicator" (7) located in the right hand control panel should display "green" when the engine is running and the clutch is engaged. The indicator directly senses the drive lubrication pressure. A failure in the drive lubrication system and subsequent loss of lubrication pressure will cause the indicator to display "red". Should the indicator display "red" during crane operation, the crane should be shut down as quickly as possible and the drive lubrication system malfunction corrected. See page 77 for the necessary trouble shooting procedures.

TRIPLE PUMP DRIVE LUBE OIL RELIEF VALVE

To protect the lubrication system for the triple pump drive, a relief valve is mounted on the discharge side of the pump. The valve is factory set to open at 100 psi (6.9 bar). No field adjustment should be required.

AIR SUPPLY LOW PRESSURE INDICATOR

Under normal operating conditions, the air supply low pressure indicator (9) in the right hand control panel will be green. Should the air pressure to the controls drop from the normal 95/100 psi (5.5/6.9 bar) range to 75 psi (5.2 bar) the indicator will turn red. At this point crane operation should be terminated as quickly as possible until proper air pressure is restored to the crane. If air pressure to the controls drops to 50 psi (3.4 bar) operation of the main and whip hoist will stop automatically.

ELECTRICAL COMPONENT BOX

This enclosure (40) contains a rectifier to produce a direct current from the 24 volt alternating current and a fuse for the 24 volt D.C. circuit.

TRANSFORMER

The transformer (43) reduces the crane electrical supply (240 or 120 volts) to 24 volts for use with the defroster fan.

CIRCUIT BREAKER CABINET AND LIGHT SWITCHES

The circuit breakers in the electrical circuit breaker cabinet (39) are provided to protect the crane electrical systems from sustained overloads and are clearly marked as to their function.

The toggle switches (38) are for the crane boom lights, engine compartment lights, and cab light.

CAB HEATER

The operator's cab heater, located on the rear cab wall is a thermostatically controlled electrical resistance heater. The thermostat (37) and power switch (36) are on the side of the heater.

HYDRAULIC TANK HEATER

Installed in the hydraulic tank is an electrical immersion heater for maintaining the hydraulic fluid at a suitable temperature to protect the crane's hydraulic system from the harmful effects of cold weather start-ups. Temperature control is provided by means of an adjustable knob located on the outside face of the heater's steel housing. The knob should be positioned with the pointer to provide a temperature setting of 75° to 100°F (24° to 38°C).

NOTE: In order to prevent overheating and possible oxidation of the hydraulic fluid, the A.C. voltage supplied to the tank heater is one-half of the nameplate voltage stamped on the heater nameplate. Therefore, a heater stamped 240 V.A.C. must be wired with 120 V.A.C., and a heater stamped 480 V.A.C. must be wired with 240 V.A.C.

ENGINE BLOCK HEATER

The diesel engines are equipped with an electrical jacket water heater to protect the engine from harmful effects of cold weather and facilitate cold weather starting. This heater is turned on by a circuit breaker in the operator's cab and controlled by a thermostat in the heater. The thermostat should be set at 90°F (32°C). The heater circuit breaker can be left in the "on" position at all times without harmful effects.

DAILY CRANE START-UP

Daily crane starting should be performed in the following sequence: (1) Inspect the crane in accordance with the maintenance schedule, (2) Position the hand throttle in the low idle position, (3) Pull the kill valve, (4) Push the clutch valve and hold for two seconds, (5) Pull the start valve, releasing immediately after the engine starts, (6) Check the engine gages, (7) Allow the engine to warm up at low idle, (8) Pull the clutch valve and hold for five seconds to properly engage the clutch, (9) Check all the hydraulic system gages for correct readings, (10) Allow the crane to warm up before lifting loads, (11) Check the operation of all the crane controls before lifting loads.

COLD WEATHER STARTING NOTE

Cranes Equipped with Ether Aid Kit - If the ambient air temperature is in the range of +35°F (2°C) to -20°F (-29°C), an ether starting aidshould be used to assist in starting the engine.

DAILY CRANE SHUTDOWN

Daily crane shutdown should be performed in the following sequence: (1) Position the boom in a rest, (2) Reduce the engine speed to low idle, (3) Push the clutch valve and hold for two seconds, (4) Push the kill valve down and wait for the engine to stop, (5) Close all cab windows and doors.

CRANE LOAD RATINGS AND LOAD CHARTS

The load ratings of the crane change with load radius, boom length and number of lines in main hoist reeving. All of the factors must be considered together. The load chart plate in the operator's cab is a tabulation of the ratings of the crane. Each plate is matched to a boom length. When the weight of a load and the radius of the load are known, the load rating versus load radius table should be consulted to confirm the load does not exceed the rating of the crane at that radius. If the load is within the rating of the crane, the reeving chart should be consulted to determine the minimum number of lines of reeving needed to lift the loads. Loads lifted by the main and whip hoists should not exceed load ratings given on the load chart plate in the operator's cab.

CAUTION: The operation of the crane during periods of high wind velocity is potentially dangerous. High winds increase the stress on certain structural members. A combination of operator action, heavy load and high winds could cause structural damage. Suspended loads may be tossed about and collide with the crane or other structures. Always exercise extreme care when the crane is operated in high winds.

## LUBRICATION

### HYDRAULIC FLUID*

CAUTION: When adding or changing the hydraulic fluid it is very important that every precaution be taken to prevent any contamination of the hydraulic fluid.

Do not mix different types of hydraulic fluids.

The following fluids are recommended:

First Choice — Automatic Transmission Fluid, Type F
Second Choice — Automatic Transmission Fluid, "Dextron"
Third Choice — Hydraulic Oil, Premium Grade with Anti-Wear Additive, 48-55 SSU at 210°F (6.8-8.9 cSt at 100°C), Minimum Viscosity Index 170

Tank Capacity — 60 U.S. Gallons (227 Litres)

Filters — Change Every 200 Hours or 2 Months

### SHAFT ASSEMBLIES AND SWING GEAR REDUCER*

Use Industrial Mild EP Gear Oil

| AMBIENT TEMPERATURE | AGMA MILD-EP LUBRICANT NUMBER |
|---|---|
| 40°F to 140°F | AGMA Mild EP #5 SSU 918-1122 at 100°F |
| -20°F to 60°F | AGMA Mild EP #2 SSU 284-347 at 100°F |
| 4.4°C to 60°C | AGMA Mild EP #5 cSt 198-242 at 37.8°C |
| -29°C to 16°C | AGMA Mild EP #2 cSt 61-75 at 37.8°C |

Capacity
Boom - 11 U.S. Quarts (10.4 Litres)
Main and Whip - 24 U.S. Quarts (22.7 Litres)
Swing Gear Reducer - 13 U.S. Quarts (12.3 Litres)

### TRIPLE PUMP DRIVE*

It is recommended that the same oil that is used in the crane's hydraulic system be used in this unit. Care must be exercised NOT to overfill the drive case as severe damage to the chain will result if it is run submerged in the lubricating fluid.

Capacity - 36 U.S. Quarts (34 Litres)

### AIR LINE LUBRICATOR

The hydraulic fluid, as used in the crane's hydraulic system, should be used in these lubricators. Do not overfill.

### BRAKE CYLINDER OIL RESERVOIRS

The hydraulic fluid, as used in the crane's hydraulic system, should be used in these reservoirs. The reservoirs should be filled only ¾ full.

*Change oil every six months or as frequently as operating conditions require to maintain a clean, sludge free oil.

## GREASE FITTINGS

Figure 2 shows the grease fittings on the OS-435 pedestal crane. The following fittings should be lubricated daily:

A. Boom foot (2 fittings in frame wall beside the hydraulic tank)

The following fittings should be lubricated weekly:

B. Swing bearings and swing pinion (7 fittings in frame wall beside the hydraulic tank)

C. Air throttle actuator (2 fittings)

D. Radiator fan sheave bearing, roller sheave bearing, and turbocharger (where applicable)

E. Triple pump drive clutch (3 fittings)

F. Lock pawl pin

G. Gantry sheaves (5 fittings)

H. Floating block sheaves (5 fittings)

J. Turn sheaves (6 fittings)

K. Main load sheaves (5 fittings)

L. Sheave extension sheave

M. Load block (sheaves and swivel)

N. Overhaul ball

The following bearings should be inspected monthly and lubricated as required:

Main, whip and boom hoist brake linkage bearings.

The recommeded greases are:

Warm Weather — Number 2 EP Lithium Base Grease

Cold Weather — Number 1 EP Lithium Base Grease

## SWING GEAR AND PINION TEETH

The teeth should be kept coated with Jet Lube, Inc., "Kopr-Kote" compound or an equivalent lubricant.

LUBRICATION POINTS

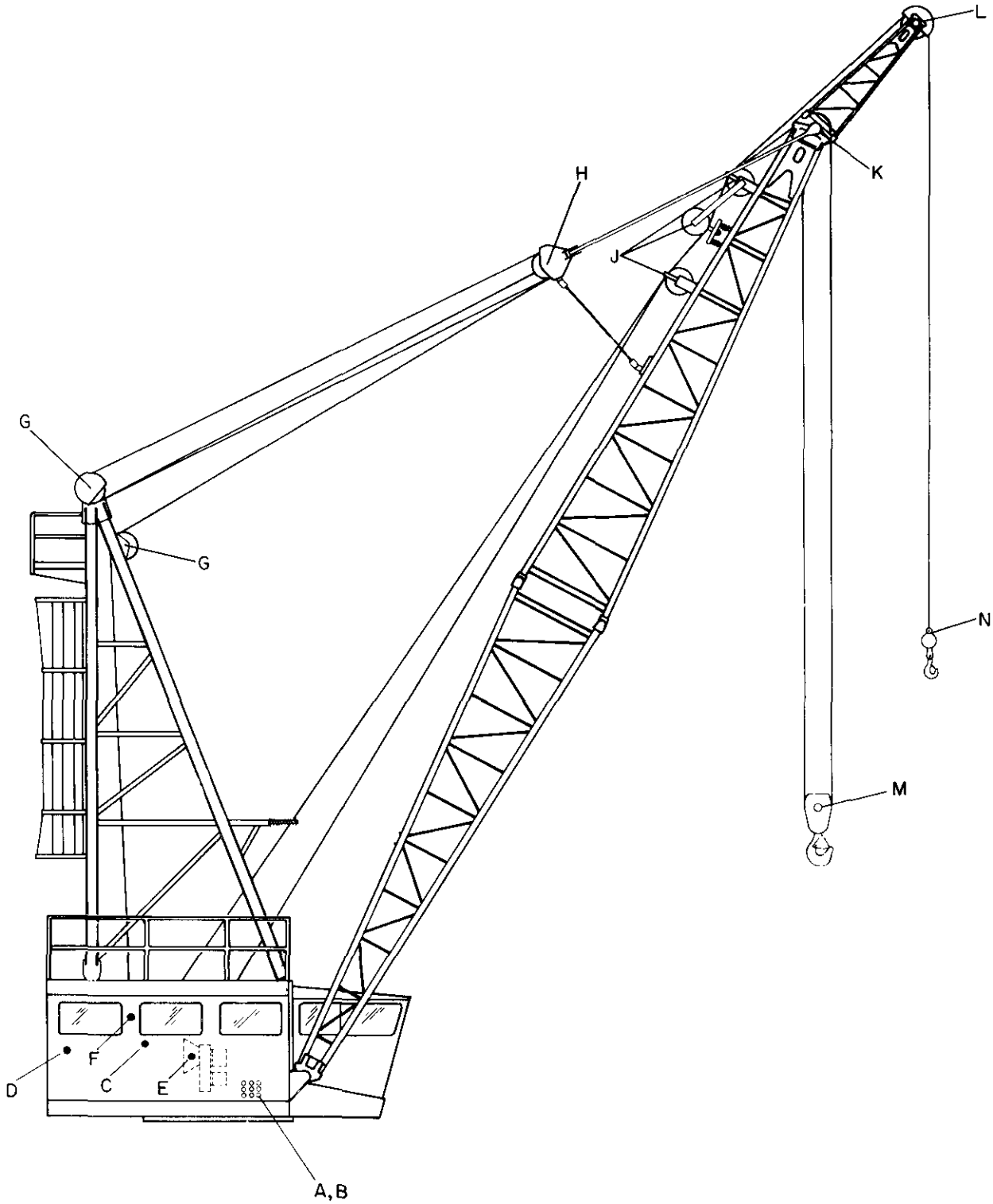


Figure 2

LT-160001

## FILTERS AND CONDITIONERS

Clean fluid is essential for the reliable operation of the crane's hydraulic system. Therefore, filters have been installed in the system to eliminate contaminants and increase the life of the hydraulic system components.

SUCTION LINE FILTER - CHANGE EVERY 2 MONTHS OR 200 HOURS

The suction line filter (Figure 3) is located beneath the hydraulic fluid tank and contains two throw-away elements separated by an adapter which must be retained when the elements are replaced. The elements in the suction line filter should be changed every two months or every 200 hours, whichever occurs first. There is also an indicator in the filter head that can be used for daily checking of the condition of the filter elements. If this indicator reads, "NEEDS CLEANING" when the hydraulic oil is warm and the engine is at full RPM, the filter elements should be changed immediately.

NOTE: The recommended element change interval should be followed even if the indicator reads "CLEAN" after 200 hours or two months of element usage.

To replace filter elements, first close the tank to filter valve, and drain the filter housing by removing the magnetic plug located under the filter. Then remove the filter head, elements, and assembling rod. Clean the magnetic plug and assembling rod magnetics and then reinstall. Insert new elements being sure that the adaptor has been inserted between them. Carefully replace the filter head, taking precautions to properly seal the filter cover "O"-ring in its groove.

IMPORTANT - OPEN TANK TO FILTER VALVE BEFORE STARTING CRANE ENGINE.

SUCTION LINE FILTER

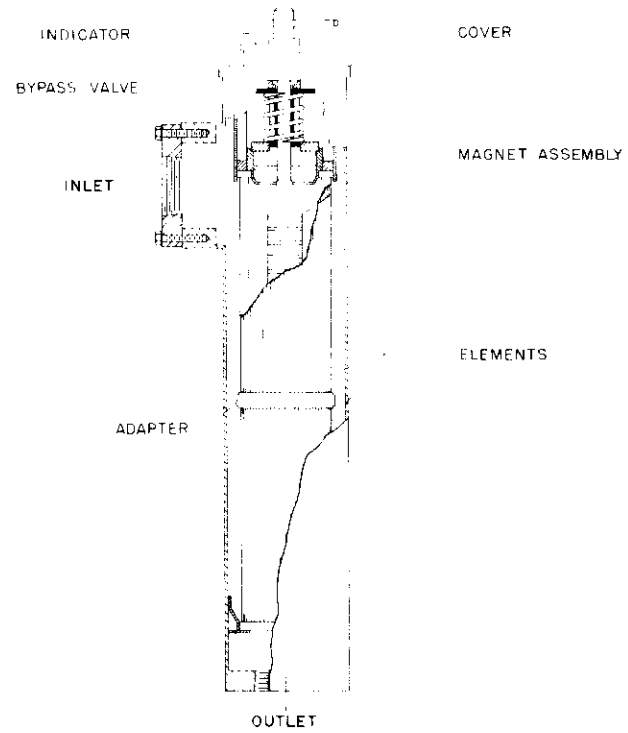


Figure 3

LT-160002

HIGH PRESSURE IN-LINE FILTERS - CHANGE ELEMENTS EVERY 2 MONTHS OR 200 HOURS

The main/whip, boom and swing high pressure hydraulic circuits are equipped with high pressure filters designed for reversible flow operation. These filters (Fig. 4) each contain a single element which should be changed every two months or every 200 hours of operation, whichever occurs first. The main/whip circuit filter is installed in the high pressure tubing line forward of the main/whip pump. The boom circuit filter is installed in the high pressure tubing on the left side of the boom motor. The swing circuit filter is installed in the high pressure tubing above and beside swing gear reducer.

A "Pop-out" type indicator is installed in each filter head for periodic checking of the element. In order to check the element's condition, the hydraulic oil must first be warmed up and the red indicator button reset by pushing the button. Next the cab control lever associated with the filter to be checked should be pushed forward completely with the engine at full RPM. This action will cause a full flow of oil through the filter. If the red button pops out during this operation, the filter should be changed immediately.

To change an element of a high pressure in-line filter, first unscrew the bowl of the filter with a wrench attached to the 1-1/8" hex boss attached to the bottom of the filter bowl. Carefully lower the bowl away from the filter head assembly and gently pry the element loose from its mounting. Push a new element into the filter head and then screw the bowl back into place being careful not to damage the sealing "O" ring or back-up rings in the filter head.

NOTE: Be certain the bowl is properly tightened when reinstalled in filter head.

IN-LINE FILTER

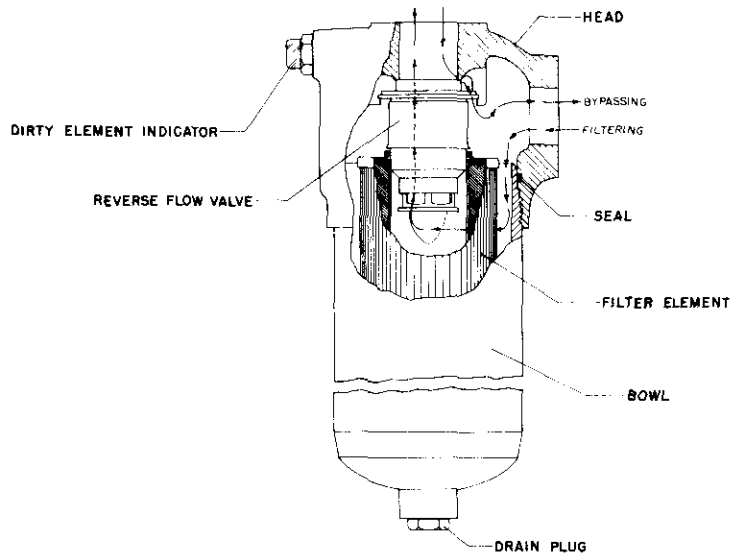


Figure 4 LT-160003

PUMP DRIVE HOUSING LUBE OIL FILTER

An oil filter is located in the suction line of the pump drive housing's lube oil pump (Fig. 5). This filter is mounted to the side of the triple pump drive housing. The wire cloth element in the filter should be cleaned every two months.

To clean the wire cloth element, disconnect the hose from the top of the filter housing and then remove the four 1/4" screws that hold the bowl to the filter head. Lift the head away from the filter bowl, and then unscrew the element from the filter head. Clean the wire cloth element and bowl, and reassemble.

LUBE OIL FILTER

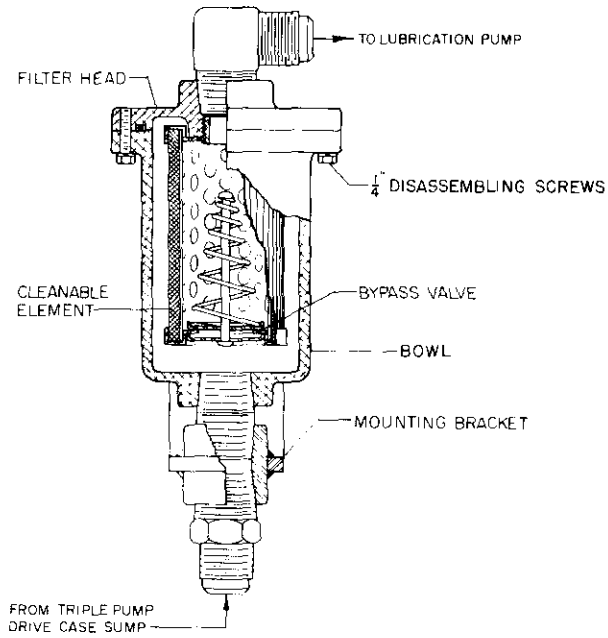


Figure 5 LT-160004

CONTROL PRESSURE SYSTEM FILTER - CHANGE ELEMENT EVERY 2 MONTHS OR 200 HOURS.

The control pressure system is provided with a separate filter to isolate it from contamination generated by the hoist and swing hydraulic systems. The filter is mounted on the inboard side of the triple pump drive in the suction line of the control pressure pump.

The filter (Fig. 6) utilizes a disposable cartridge type element. To change filter elements, the used element is unscrewed from the filter head and the new element is installed in its place. The element should be hand tightened, only.

HYDRAULIC TANK FILL FILTER

Fluid is added to the hydraulic tank by means of a hand pump. This pump and the fluid fill filter are located on the hydraulic tank. This single element filter is provided between the hand pump and the hydraulic tank to filter all fluid being added to the hydraulic tank. This filter element should be changed whenever the crane's hydraulic fluid is changed. Directions for changing the element are included in each new element box.

CONTROL PRESSURE SYSTEM FILTER

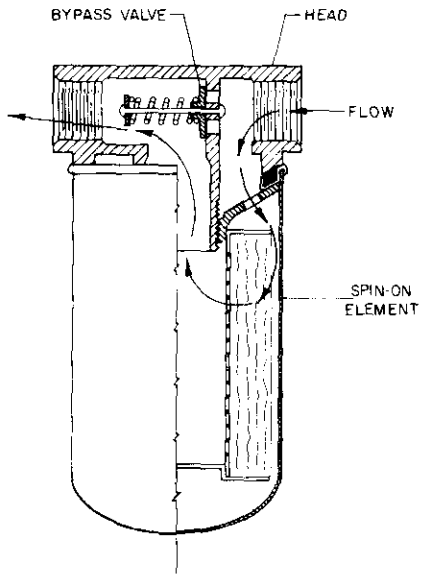


Figure 6

LT-160043

AIR DRYER-PURIFIER

All crane control air is dried and filtered prior to being used. The compressed air dryer-purifier is located on the outside of the rear wall of the operator's cab. This is a desiccant type dryer and should be serviced every six months.

To service the dryer, follow these steps:

1. Cut off air supply to the dryer-purifier and drain the air pressure from the small air receiver.
2. Remove the top retaining nut using a 13/16" end wrench and remove the cap and bypass spring.
3. Using the bail, remove the canister from the housing. It may be necessary to loosen the canister from the housing by using a twisting back and forth motion while pulling upwards.
4. Lightly lubricate all the O-rings.
5. Using a rotating motion to properly seat the O-ring below the housing shoulder, install the replacement canister.
6. Replace the cap and bypass spring and secure with the retaining nut.
7. Restore the air supply to the dryer-purifier.

NOTE: Replacement desiccant canisters should be stored in a dry place.

AIR DRYER-PURIFIER

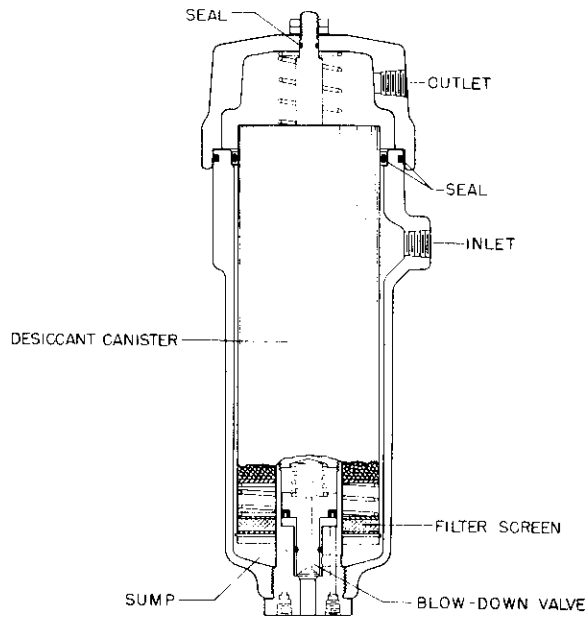


Figure 7 LT-160005

AIR LINE LUBRICATOR (CAB CONTROLS)

The air line lubricator is a dynamic device. Oil is delivered into the compressed air line only when air is flowing through the lubricator. The lubricator is mounted on the small air receiver on the rear wall of the operator's cab.

An oil feed adjusting screw is provided on the top of the lubricator. Rotating the oil feed adjusting screw clockwise reduces the drip rate, counterclockwise increases the drip rate. Once the setting is established the lubricator will automatically adjust the drip rate with changes in flow. The drip rate should be adequate to provide a light film of lubrication for the seals and bearings of the air valves.

The drip rate is adjusted by first establishing a moderate air flow through the regulator. Next pull the red lock ring up and turn the adjustment screw to the desired drip rate. Finally push the red lock ring back into place. The rate of air lubrication should be observed for several days and adjusted further as may be required.

*NOTE: DO NOT OVERFILL LUBRICATOR RESERVOIR.*

## AIR LINE LUBRICATOR

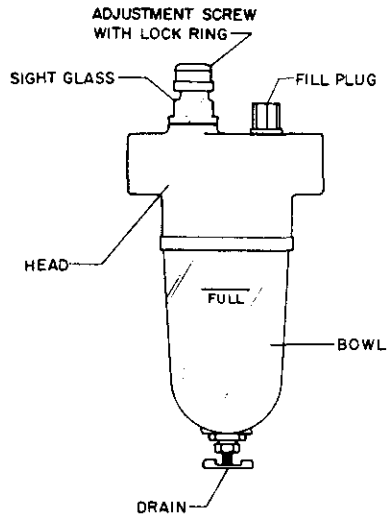


Figure 8

LT-160006

## ELECTRICAL SCHEMATIC FOR CATERPILLAR ENGINE CRANES

NOT APPLICABLE TO THIS ORDER

SEE DRAWING 1612009-800 IN APPENDIX

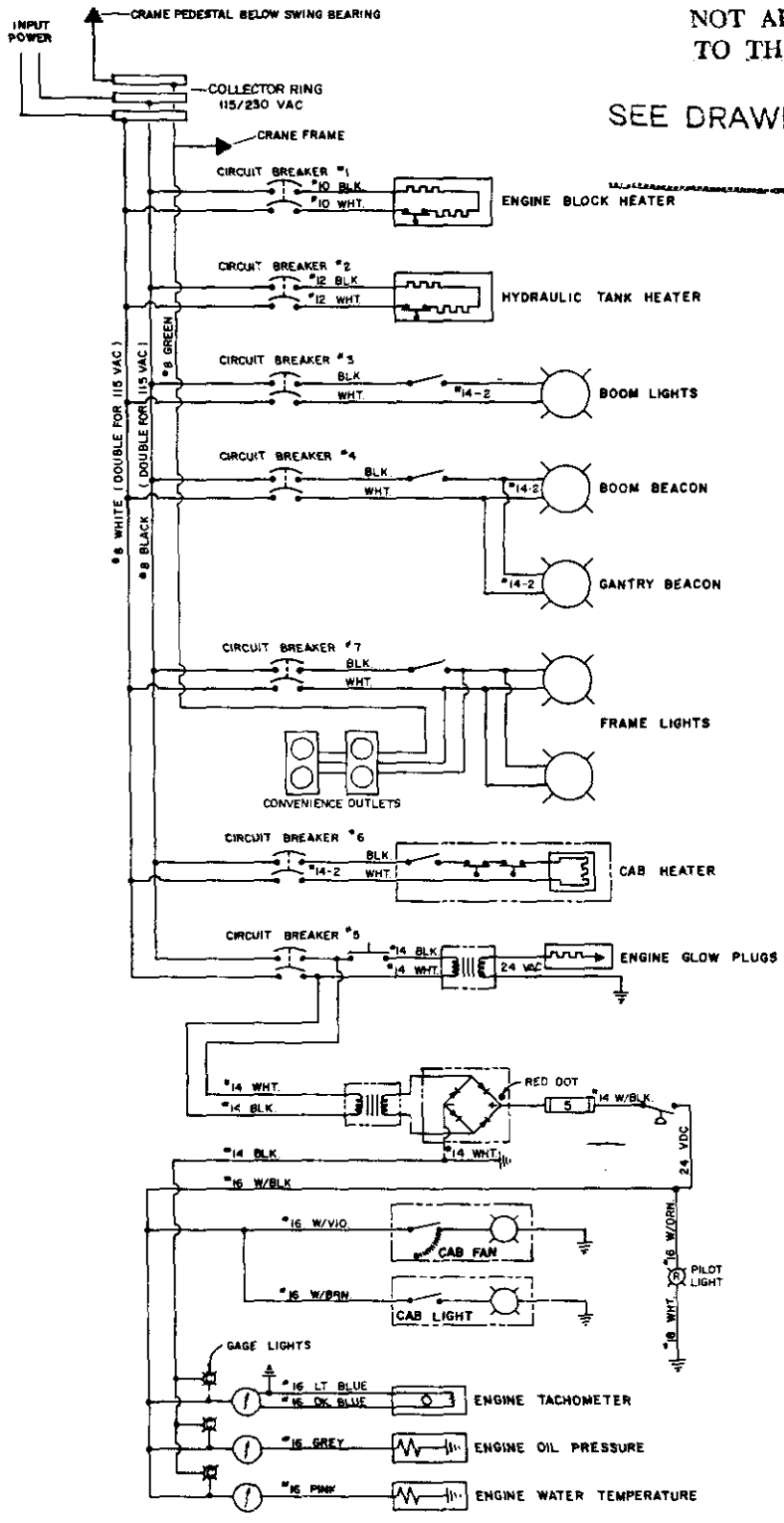


NOTE : OPERATOR'S CAB MUST BE GROUNDED TO CRANE FRAME

Figure 9A

LT-160007

## ELECTRICAL SCHEMATIC FOR DETROIT DIESEL ENGINE CRANES

NOT APPLICABLE TO THIS ORDER

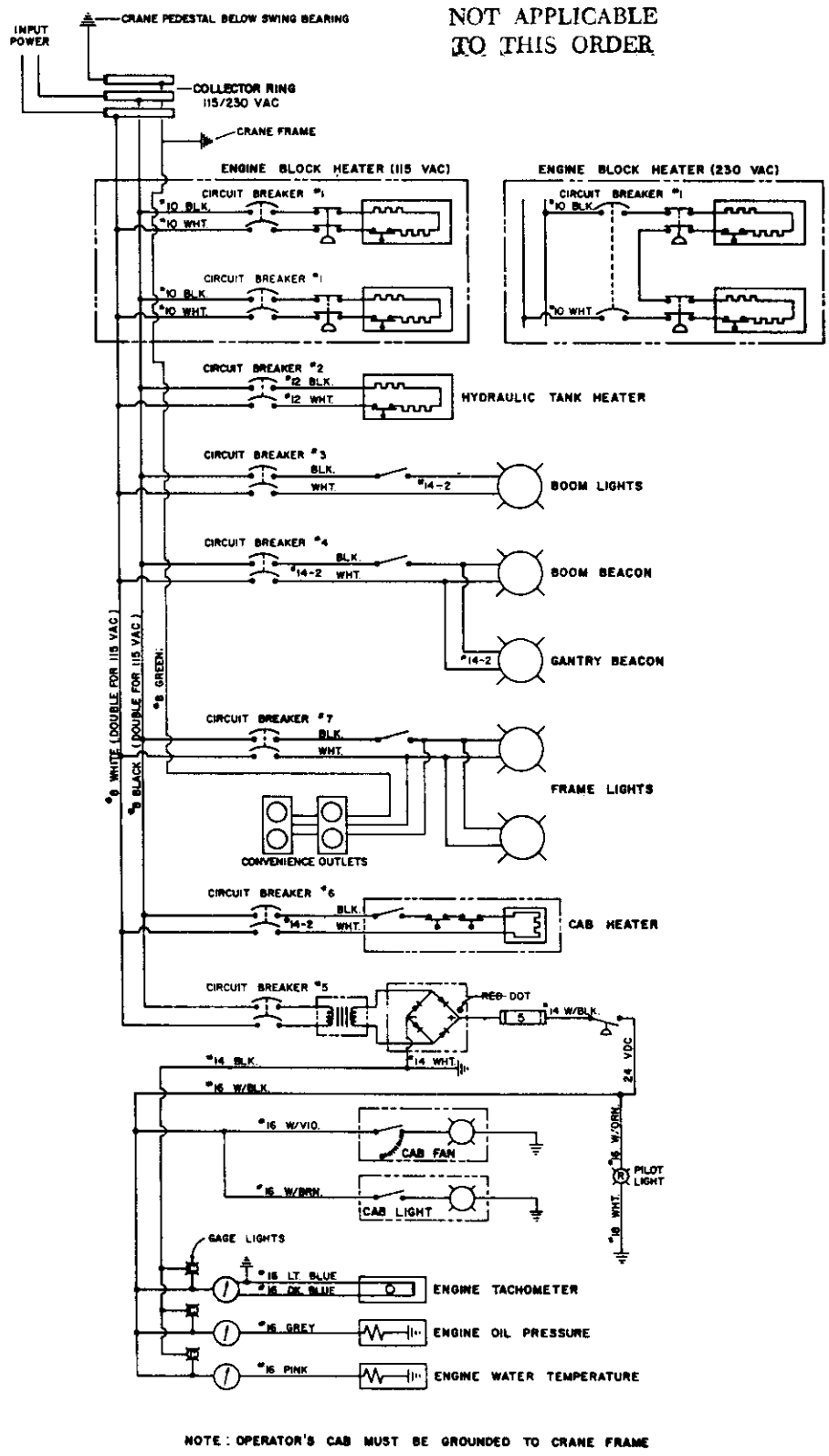


NOTE : OPERATOR'S CAB MUST BE GROUNDED TO CRANE FRAME

Figure 9B

LT-160049

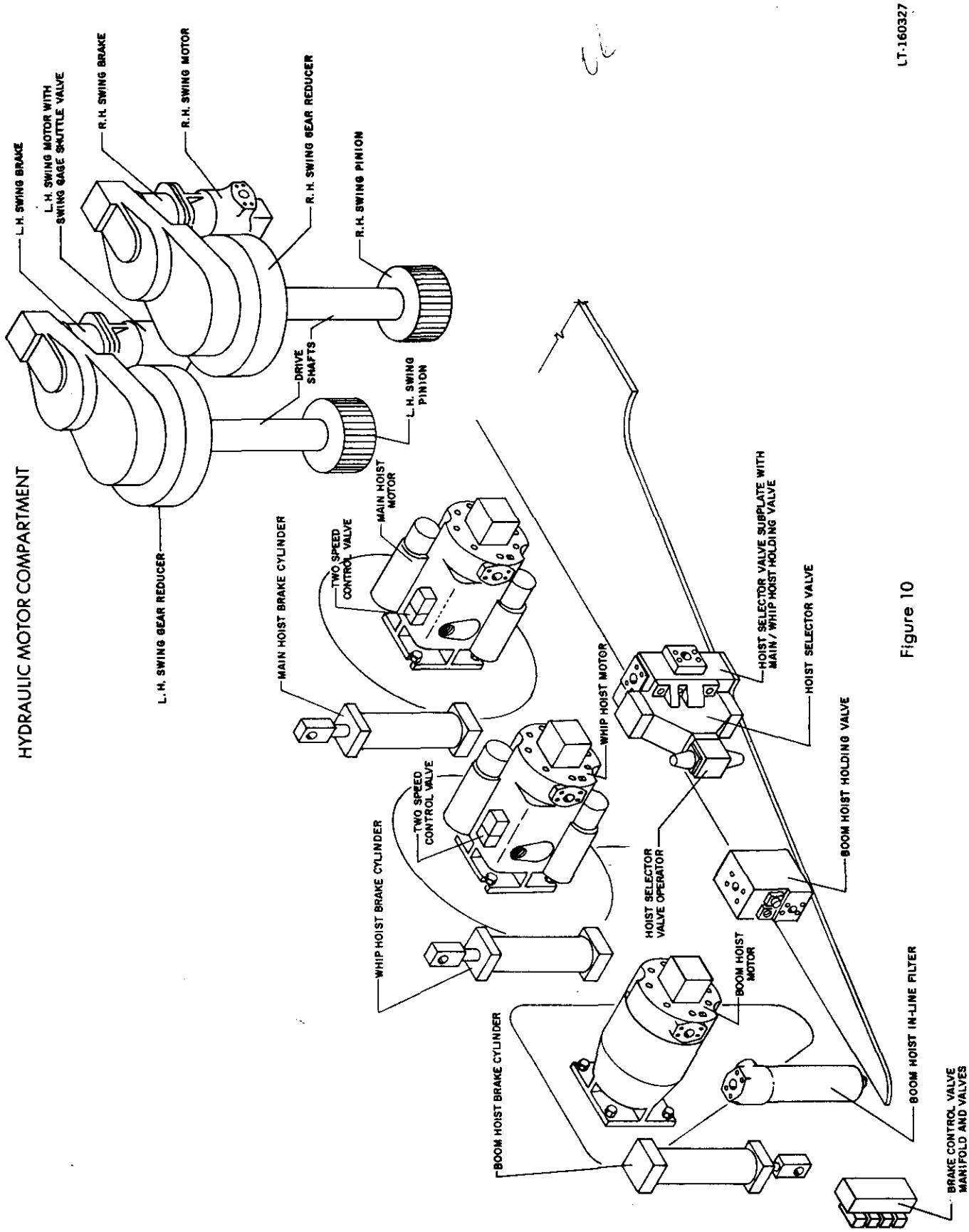
HYDRAULIC MOTOR COMPARTMENT
L.H. SWING BRAKE
L.H. SWING MOTOR WITH SWING GAGE SHUTTLE VALVE
R.H. SWING BRAKE
R.H. SWING MOTOR
R.H. SWING GEAR REDUCER
R.H. SWING PINION
DRIVE SHAFTS
L.H. SWING PINION
L.H. SWING GEAR REDUCER
MAIN HOIST MOTOR
TWO SPEED CONTROL VALVE
MAIN HOIST BRAKE CYLINDER
WHIP HOIST MOTOR
HOIST SELECTOR VALVE SUBPLATE WITH MAIN / WHIP HOIST HOLDING VALVE
HOIST SELECTOR VALVE
TWO SPEED CONTROL VALVE
WHIP HOIST BRAKE CYLINDER
HOIST SELECTOR VALVE OPERATOR
BOOM HOIST HOLDING VALVE
BOOM HOIST MOTOR
BOOM HOIST BRAKE CYLINDER
BOOM HOIST IN-LINE FILTER
BRAKE CONTROL VALVE MANIFOLD AND VALVES
LT-160327

Figure 10

LT-160009

ENGINE COMPARTMENT

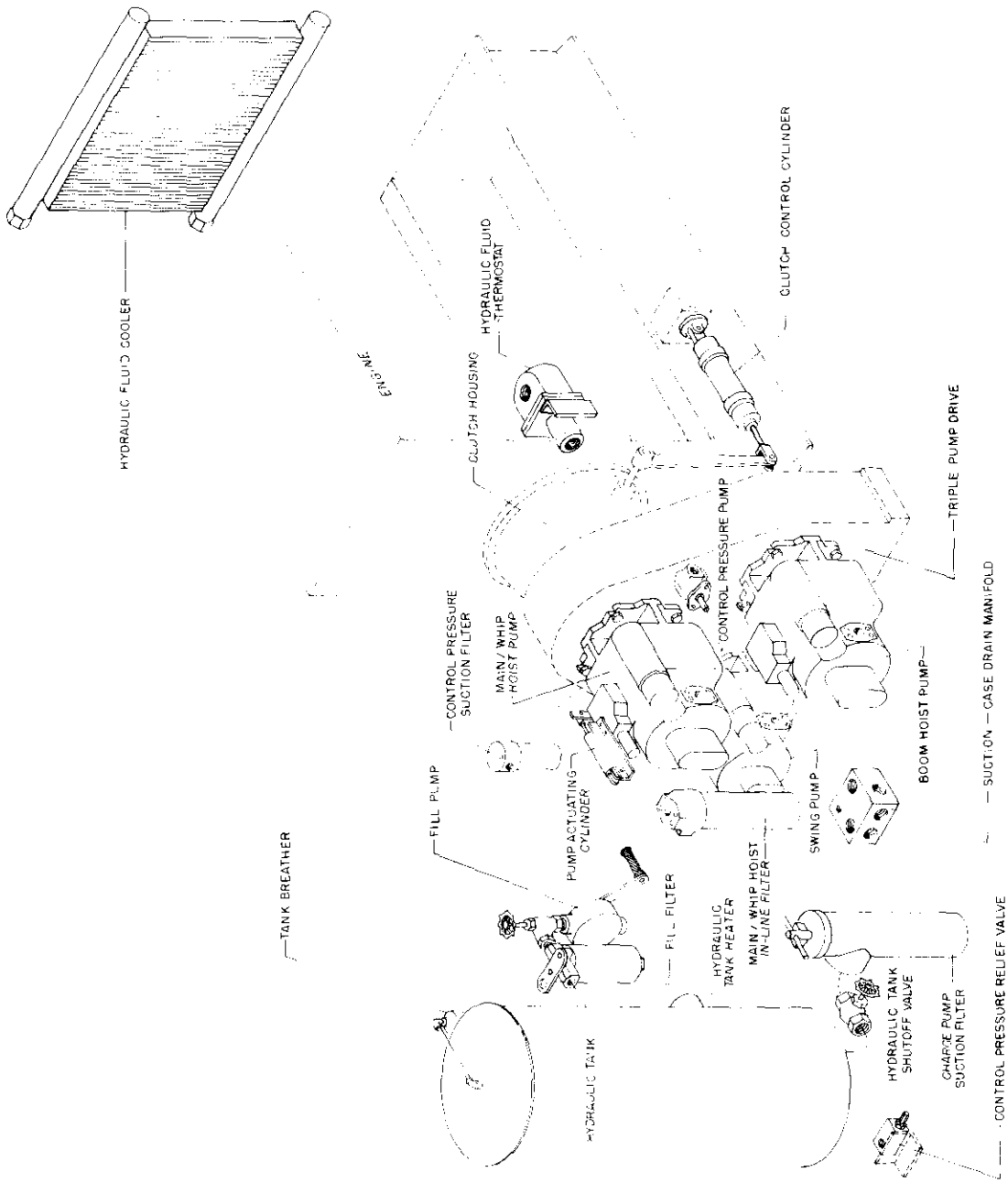


Figure 11

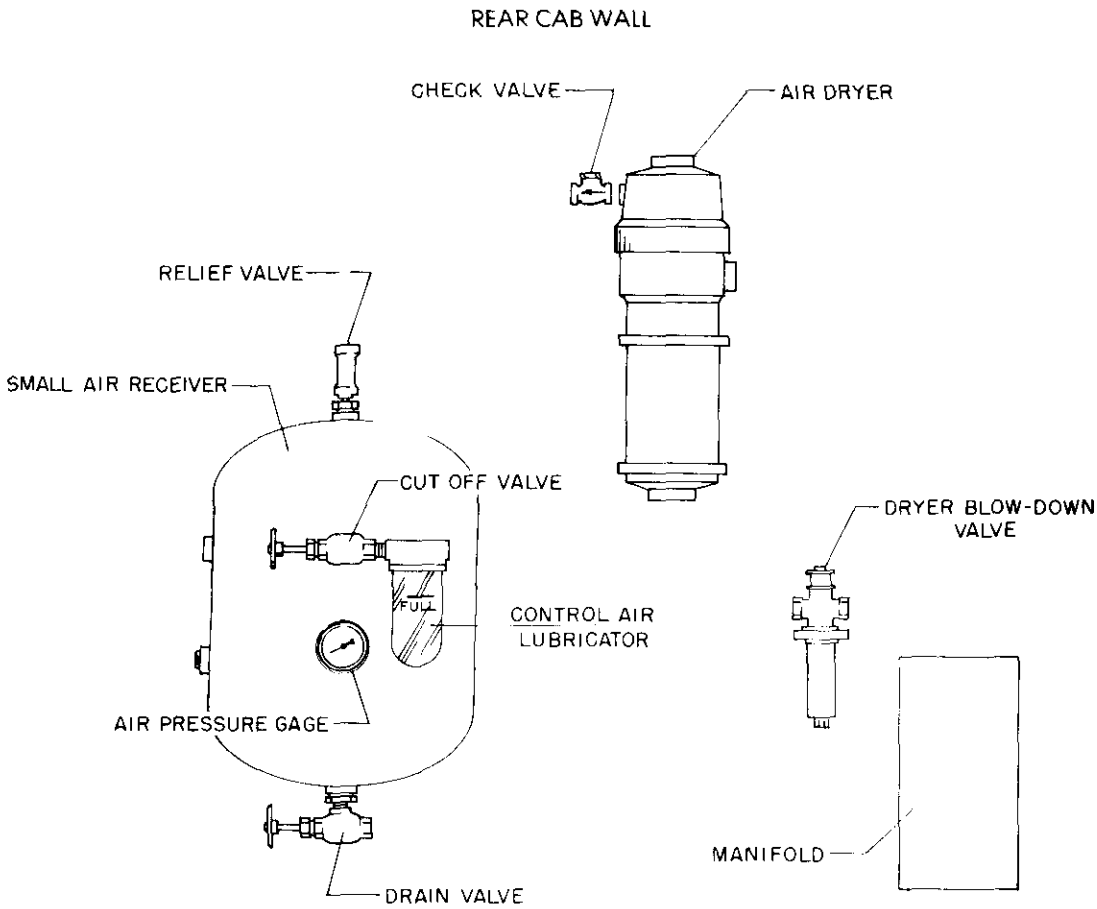


Figure 12

LT-160010

TRIPLE PUMP DRIVE

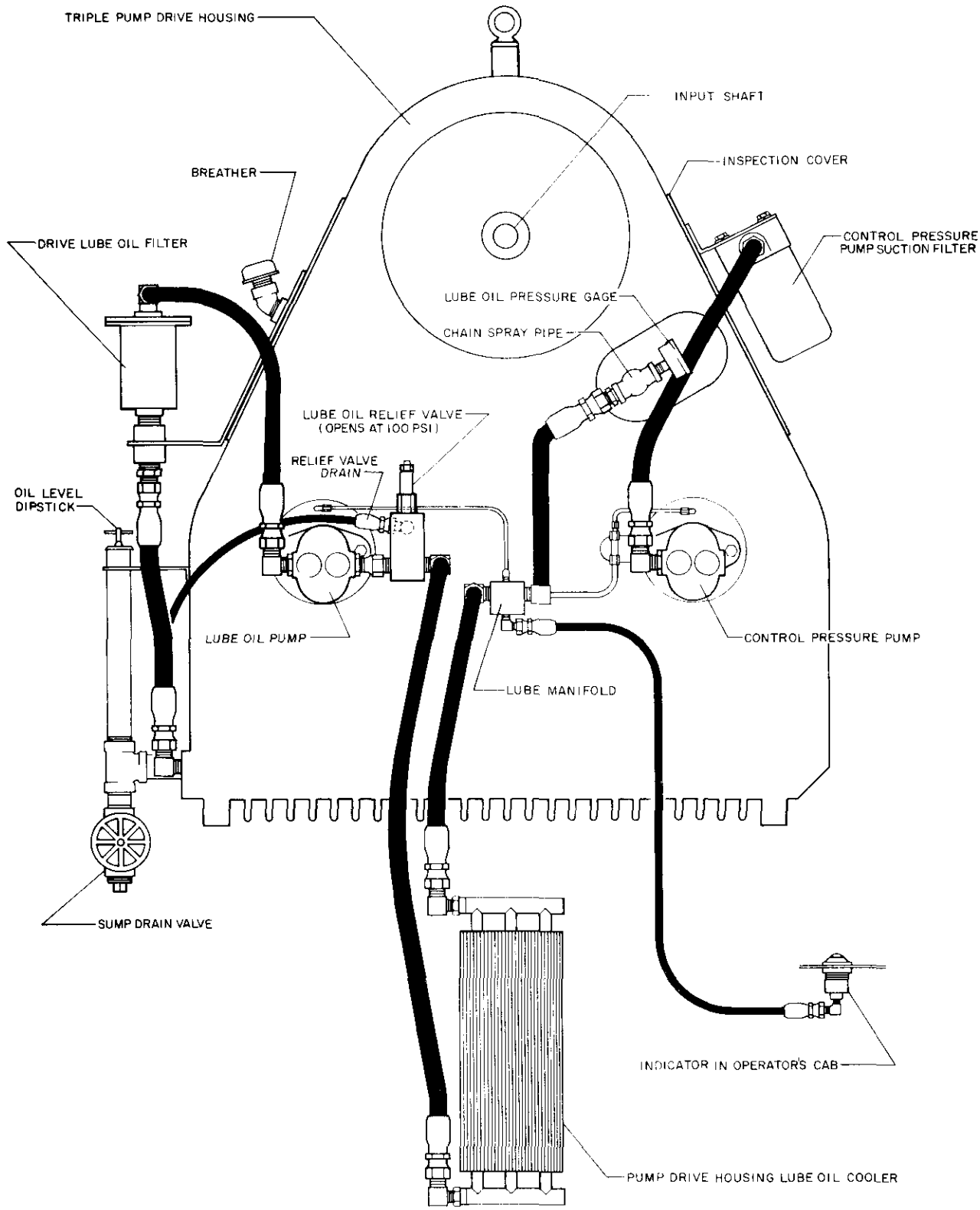


Figure 13

LT-160011

FIXED MOTOR AND VARIABLE PUMP

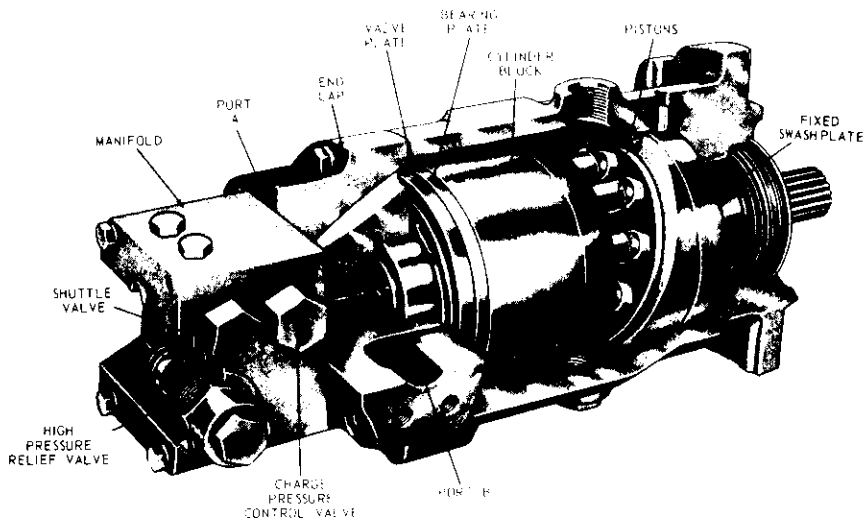


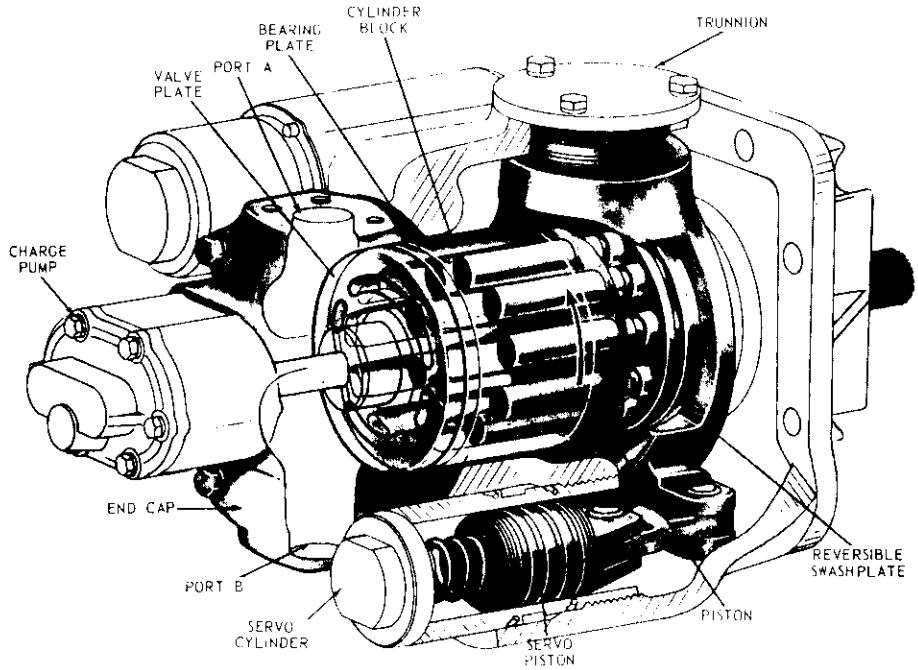


Figure 14

LT-160012

## HYDROSTATIC DRIVE

With the exception of the charge pressure, lubrication and control pressure pumps, all pumps and motors are of the axial piston type. These are incorporated for their high efficiency, long life and trouble free service.

Each system (main hoist, whip line hoist, boom hoist and swing) is a closed loop hydrostatic drive.

The hydrostatic drive offers infinite control of speed. The operator has complete control of the system with one lever for starting, stopping, load hoisting, or load lowering. The dynamic braking capabilities inherent with the closed loop hydrostatic drive provide normal braking requirements.

Control of the variable displacement, axial piston pump is the key to controlling the hoist or swing functions. Engine horsepower is transmitted to the pump. When the operator moves the control lever, the swashplate in the pump is tilted from neutral (camming the pump). The position of the control lever will determine the angle of the swashplate and, therefore, the volume of oil delivered by the pump. The control lever is stepless; therefore, the speed of the hoist or swing is infinitely variable from zero to maximum.

The variable displacement, reversing swashplate pump is controlled by a servo system. The pump control lever can be moved to some predetermined position with the servo system moving the swashplate of the pump to this predetermined point. The use of a servo system on the variable pump controls permits a minimum force requirement to move the pump control handle.

When the variable pump swashplate is tilted, a positive stroke of the pistons is created. This, in turn, at a given input speed, produces a certain flow of oil from the pump. This flow is transferred through high pressure lines to the motor. The ratio of the volume of flow from the pump to the volume displacement of the motor will determine the speed of the motor output shaft. Moving the control lever to the opposite side of neutral, the direction of flow from the pump is reversed and the motor output shaft turns in the opposite direction. Speed of the motor output shaft is controlled by adjusting the volume displacement (flow) of the pump. Working pressure is determined by the load and this establishes the demand on the system.

The crane's hydrostatic drive system consists of: pumps, motors, selector valve, holding valves, and pump manifold block.

PUMPS

The main/whip hoist pump is a variable displacement axial piston type pump mounted on the top mounting pad of the triple pump drive. It receives power from the engine through the drive shaft of the triple pump drive. This pump supplies the high pressure fluid for both the main and whip line hoist operations.

The boom hoist pump is a variable displacement axial piston type pump mounted on the bottom right mounting pad of the triple pump drive. It receives power from the engine through the chain and sprockets contained within the triple pump drive housing. This pump supplies the high pressure fluid for the boom hoist operation.

The swing pump is a variable displacement axial piston type pump mounted on the bottom left mounting pad of the triple pump drive. It receives power from the engine through the chain and sprockets contained within the triple pump drive housing. This pump supplies the high pressure fluid for the swinging operation.

CHARGE PUMPS

Mounted to the rear of each axial piston pump is a gear type charge pump. The purpose of the charge pump is to provide an exchange of fluid in the hydrostatic drive circuit. The charge pump also provides sufficient fluid under pressure for pump servo control purposes and for internal pump and motor leakage make-up. The charge pump adds fluid to the hydrostatic circuit through two check valves behind the pump.

BOOM AND MAIN/WHIP CHARGE SYSTEM

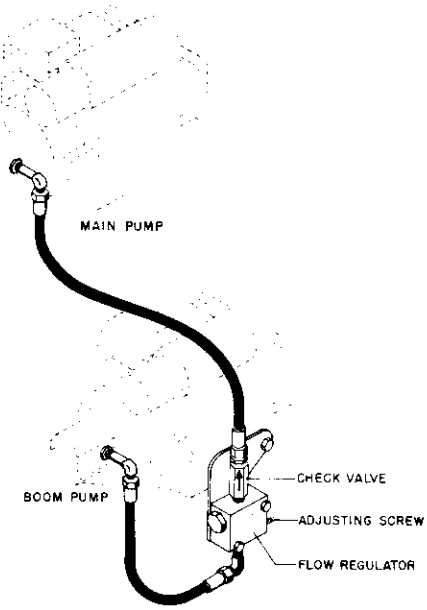


Figure 15 LT-160013

The charge pump of the main/whip pump has a displacement of 2 cubic inches per revolution. The charge pump of the boom pump has a displacement of 4 cubic inches per revolution. The main/whip and boom charge pumps are connected by way of flow regulator and check valve arrangement which permits a portion of the boom charge pump flow to pass into the main/whip circuit. This arrangement provides greater charge pressure flows and higher charge pressures for lubricating and cooling purposes than what could normally be provided by having 2 cubic inch charge pumps on both the main/whip and boom pumps.

ADJUSTMENT OF BOOM AND MAIN/WHIP CHARGE SYSTEM FLOW REGULATOR (Figure 15)

From a fully closed (screwed-in) position, the adjusting screw of the flow regulator should be backed out 3-1/4 turns. This position of the adjusting screw will permit the correct proportion of flow to pass from the boom charge pump into the main/whip charge system. Never operate the crane with the adjusting screw of the flow regulator fully closed, in order to prevent excessive case drain pressures in the boom pump and motor. After adjustment of the valve tighten the adjustment screw jam nut while holding the adjustment screw.

CASE DRAIN FLUID

Case drain fluid is the hydraulic fluid which fills the cases surrounding the moving parts of the pumps and motors. This fluid is made up of the internal leakage from the pump and motor and excess discharge flow from the charge pump. Since the charge pump replenishes internal leakage, case drain flow should always equal the discharge flow of the charge pump.

The cooling of a hydrostatic drive is accomplished by removing a requlated amount of fluid from the low pressure side of the hydrostatic loop and directing the hot fluid into the hydraulic motor case. From the motor case the fluid flows to the hydraulic pump case and down to the suction - case drain manifold block. From the manifold block, the hot fluid is directed to the thermostat valve and then through the air-to-fluid heat exchanger. The cooled fluid is then returned to the hydraulic tank. Since the amount of fluid in the hydrostatic circuit must remain constant, the regulated amount of fluid removed from the low pressure side of the hydrostatic circuit is replaced by the fluid from the charge pump. The source of fluid for the charge pump is the hydraulic tank. The regulation on the amount of fluid leaving the hydrostatic circuit is accomplished by using a relief valve and a pressure sensing shuttle valve. NOTE: The maximum allowable case drain pressure is 40 psi (2.8 bar). Normally case drain pressure is approximately 5 psi (.3 bar).

PUMP CONTROL

The volume displacement and direction of the flow of fluid from an axial piston pump is controlled by a displacement control valve mounted on each pump. The control valve is used to direct fluid from the charge pump to the axial piston pump servo cylinders for tilting the swashplate, which produces flow from the pump. The position of the swashplate is sensed by the control valve. The valve compares the position of the external control lever and position of the swashplate and directs fluid to the appropriate servo cylinder.

The external control levers of the main/whip, boom and swing pumps are actuated by air cylinders which extend or retract due to air pressure from control valves in the operator's cab. NOTE: When the cab control levers are in neutral, the actuating cylinders should not be pushing or pulling on the pump control levers.

DISPLACEMENT CONTROL VALVE OPERATION (Figure 16)

The axial piston pumps incorporate a powered servo system to control the swashplate with minimum external effort. The valve assembly is a closed center four-way valve with the servo cylinder ports exhausted at the center position. The valve is operated through internal linkage connections with both the swashplate and the external control lever or handle.

To put the pump in stroke, cam the pump, the control handle (1) moves the displacement control spool (2) through a torsional spring (3). The spool ports fluid from the charge pump at charge pressure (4) to a servo cylinder (5). The piston moves the swashplate (6) against the opposite servo spring (7). Both servo springs are constrained so they can only force the swashplate toward neutral. When the swashplate has moved to the angle set by the control lever, the feedback link (8) returns the displacement control spool to neutral until either the swashplate or control lever changes position.

The orifice (11), when used, restricts the incoming charge supply to limit the maximum servo response rate. The torsional spring (3) allows the operator to rapidly pre-select the desired speed setting without waiting for the swashplate to follow-up.

When the control lever is returned to neutral, the displacement control spool is returned to neutral by a coil spring (10). This allows the fluid from both servo cylinders to flow into the pump case through the small underlaps (9). Both servo cylinders are thus exhausted and one of the servo springs mechanically forces the swashplate to neutral.

DISPLACEMENT CONTROL VALVE OPERATION

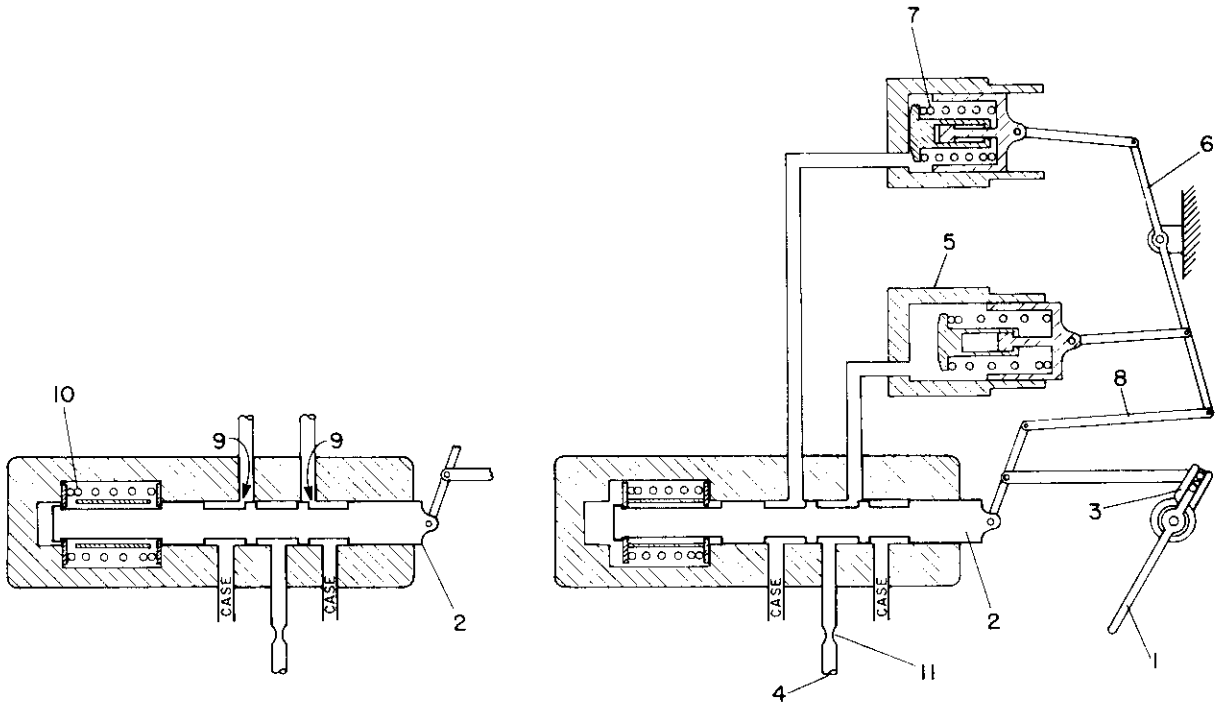


DISPLACEMENT CONTROL VALVE IN NEUTRAL

DISPLACEMENT CONTROL VALVE OUT OF NEUTRAL AND SWASHPLATE CAMMING

Figure 16 LT-160014

MOTORS

The main and whip line hoist motors are variable displacement axial piston type hydraulic motors mounted on the shaft assemblies and are connected to the main/whip pump by high pressure tubing. These motors are each equipped with a two position valve controlling the speed range of the motor (high or low).

The displacement, thus the speed range, of the main and whip motors is changed by directing main/whip hoist system charge pressure to the lower servo cylinder for high speed or upper servo cylinder for low speed. The charge pressure is taken from the motor valve manifold through a 1/4 inch (6.4 mm) steel tube to the side of the motor. At the side of the motor, the tubing connects with the internal porting of the motor. The internal porting connects with the two speed hoist control valve on top of the motor. This valve then directs charge pressure (through internal porting) to the appropriate servo cylinder while exhausting the pressure in the opposite cylinder to the motor case.

The boom hoist motor is a fixed displacement axial piston type hydraulic motor mounted on the boom hoist shaft assembly and is connected to the boom pump by high pressure tubing.

The swing motor is a fixed displacement axial piston type hydraulic motor mounted below the swing gear reducer assembly. The swing motor is connected to the swing pump by high pressure tubing and hoses.

All hoist motors are mounted to the shaft assemblies with port "A" on the right.

MOTOR MANIFOLD VALVE ASSEMBLY (Figure 17)

A manifold valve assembly is attached to the rear of each hydraulic motor. This valve assembly contains two pilot operated high pressure relief valves which serve to prevent sustained abnormal pressure surges in the two high pressure hydraulic lines of each motor. The relief valve on the left side of the motor monitors the pressure on the right side of the motor. The relief valve on the right side of the motor monitors the pressure on the left side of the motor. Each relief valve has a two digit number stamped on the exposed end stating the valve's setting. For the main and whip hoist motors the relief valve stamped "50" is set at 5000 psi and monitors the pressure required for hoisting or lowering a load. For the boom hoist motor the relief valve stamped "60" is set at 6000 psi and monitors the pressure required for hoisting or lowering the boom. The relief valves stamped "15" are set at 1500 psi and monitor the pressure required to power down an empty boom or hook. The relief valves of the swing motor are both stamped "45" and are set at 4500 psi.

The manifold valve assembly also contains a shuttle valve and a charge pressure relief valve. The shuttle valve functions to establish a circuit between the hydraulic tubing line that is at the lower pressure and the charge pressure relief valve. This charge pressure relief valve has a lower setting than the charge pressure relief valve in the charge pump. Therefore, charge pressure will be relieved at the motor anytime the shuttle valve has moved from its center position. This provides a method of not only controlling the charge pressure level, but also a method of removing some hot fluid from the hydrostatic circuit. This hot fluid is then replaced by cool, clean fluid from the charge pump.

MOTOR VALVE MANIFOLD ASSEMBLY

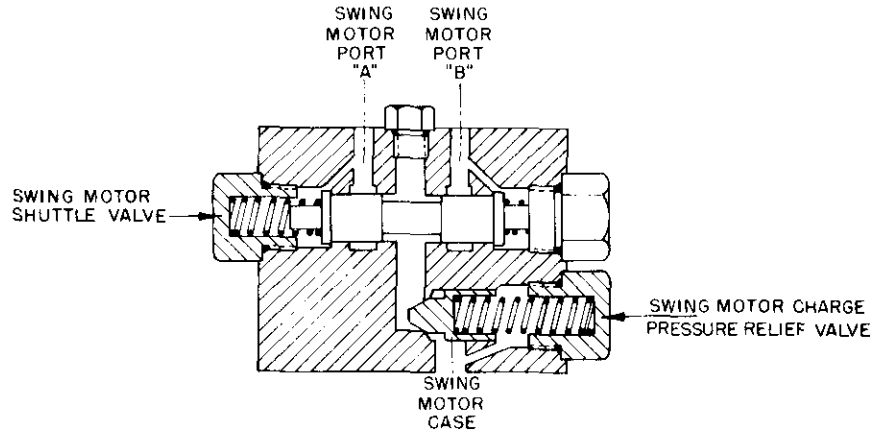


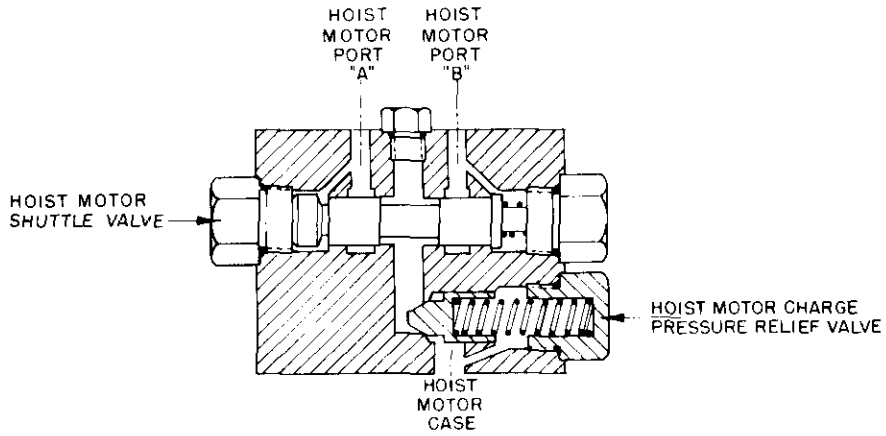


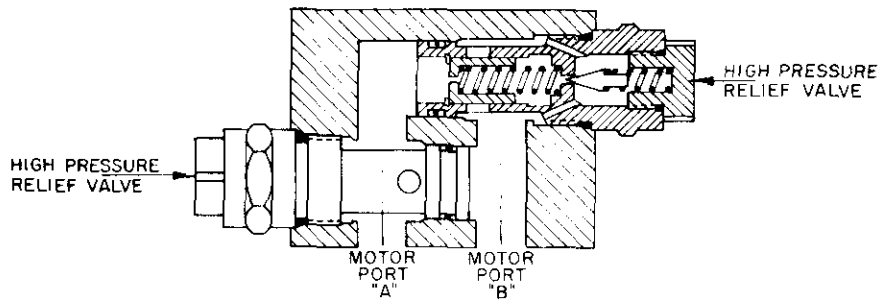


Figure 17

LT-160015

SUCTION - CASE DRAIN MANIFOLD BLOCK (Figure 18)

This block is mounted on the floor forward of the triple pump drive and serves a dual purpose. The block contains two seperate chambers with each chamber having provisions for hose fittings. One chamber receives fluid from the suction line filter and distributes it to each of the three hydrostatic drive charge pumps. The other chamber receives case drain flow from each of the three hydrostatic drive pumps and provides an outlet for the fluid to pass to the heat exchanger. Between the two chambers is a relief valve set at a cracking pressure of 25 psi (1.7 bar). This valve permits some of the case drain flow to pass from the case drain chamber into the suction line chamber in instances when case drain pressure becomes excessive; such a case could occur during a cold hydraulic fluid start-up.

SUCTION - CASE DRAIN MANIFOLD BLOCK

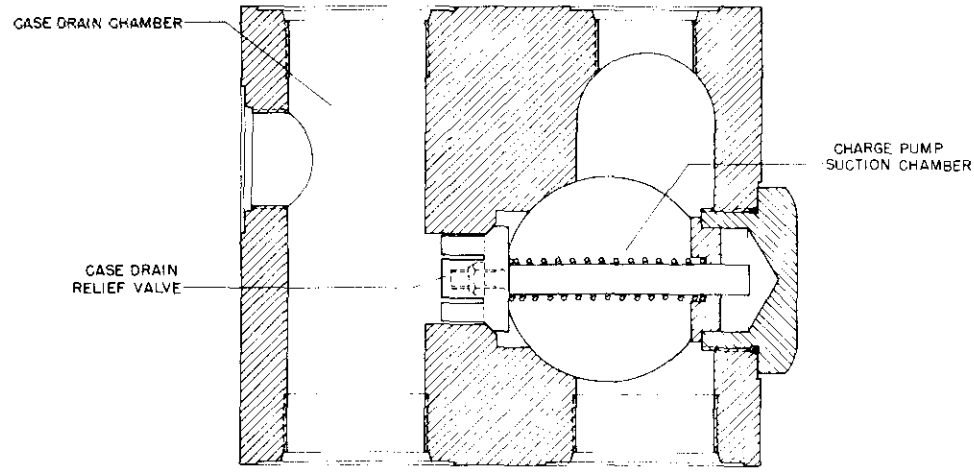


Figure 18

LT-160016

HOIST SELECTOR VALVE (Figure 19)

The hoist selector valve functions to direct the main/whip pump flow to either the main hoist motor or whip line motor. This valve is a four-way, three-position, spring-centered directional control valve. The selector valve is pilot operated by means of an air operated directional control valve (P-16) mounted directly to the selector valve. This small directional control valve directs control pressure to the ends of the selector valve spool.

HOIST SELECTOR VALVE

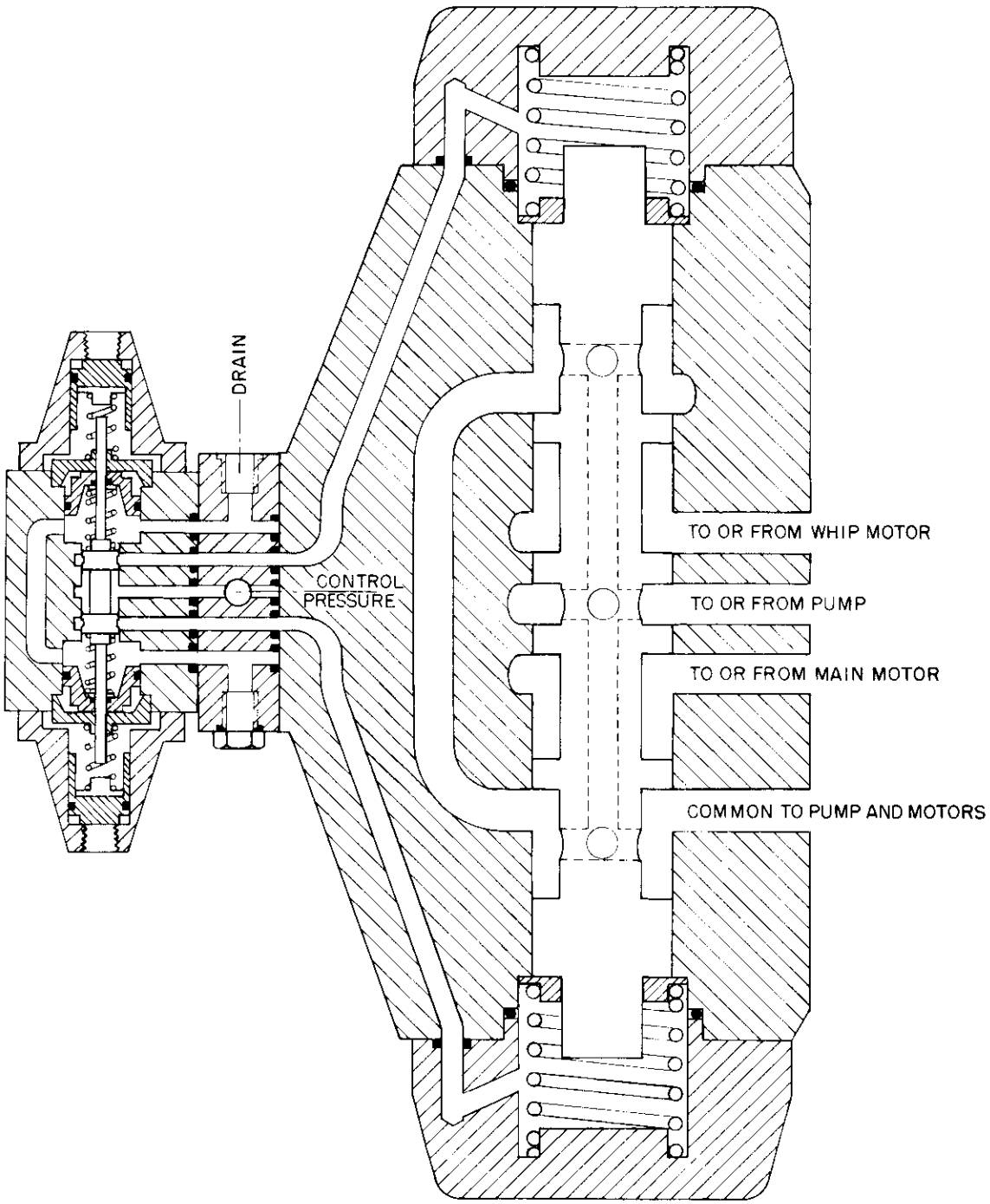


Figure 19

LT-160017

HOLDING VALVES (Figure 20)

Two valves, check and flow control, contained in the same body constitute the holding valve. When hoisting the check valve provides a direct path for fluid flow to the motor, bypassing the flow control valve. When lowering a load, the check valve closes requiring the fluid to pass through the flow control valve which prevents overspeeding of the pump or motor. The flow control valve compares the pressure on each side of the pump and regulates the flow of oil accordingly. The holding valve will function properly only when the hydrostatic drive is in sound operating condition. Two holding valves are used on the crane, one for the main and whip hoists and the other for the boom hoist.

HYDRAULIC SYSTEM COOLING

The temperature of the crane's hydraulic fluid is controlled by means of a thermostat valve located beside the engine and an air to fluid heat exchanger mounted to the front of the engine radiator. When the case drain fluid is cool the thermostat valve routes the fluid from the case drain chamber of the suction - case drain manifold block back to the hydraulic tank, bypassing the air to fluid heat exchanger. After the hydraulic fluid in the pump and motor cases reaches 145°F (63°C), the thermostat valve begins shifting to direct the hot fluid to the air to fluid heat exchanger for cooling.

HOLDING VALVE OPERATION

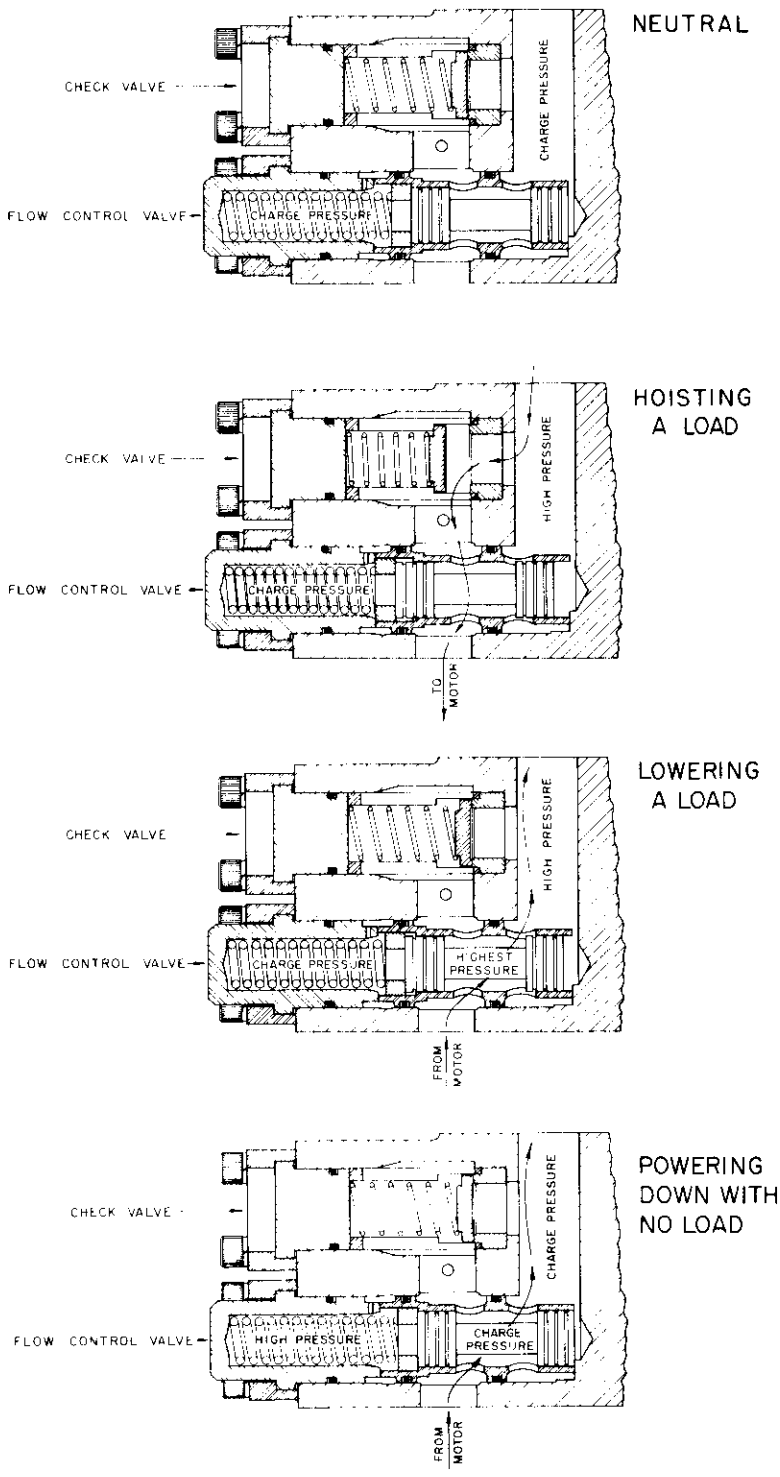


Figure 20

LT-160018

## HYDRAULIC TANK

The hydraulic tank is located in the engine compartment directly behind the operator's cab. The tank is equipped with a sight glass for checking the oil level, a micronic vent filter for protection from airborne contaminants and a drain valve. The tank is also equipped with a hand pump and filter arrangement for adding hydraulic fluid to the system. A valve installed between the hand pump and filter must be closed after adding fluid to prevent possible leakage back through the filter and pump.

Also installed in the hydraulic tank is an electric immersion heater for maintaining the hydraulic oil at a suitable temperature to protect the crane's hydraulic system from the harmful effects of cold weather start-ups. The heater should be adjusted to a temperature setting of 75° to 100°F.

NOTE: THE HYDRAULIC FLUID LEVEL SHOULD BE CHECKED PERIODICALLY TO SEE THAT FLUID IS AT THE PROPER OPERATING LEVEL.

## SUCTION LINE SHUT OFF VALVE

Located between the hydraulic tank and suction line filter is a gate type shut off valve. This valve must never be closed while operating the crane. Severe damage to the hydraulic system can occur if the hydraulic pumps are permitted to rotate with the suction line valve closed. The shut off valve should only be closed if maintenance to the hydraulic system is to be performed. After the maintenance is completed the valve should be opened immediately and locked with the valve stem lock.

## HYDRAULIC FLUIDS

Only high grade hydraulic fluids, as specified on page 13, may be used in the crane's hydraulic system. If it is necessary to add hydraulic fluid to the system, only the same type as in the tank should be used. The mixing of different types of fluids is not advisable due to the possible incompatibility and neutralization of the fluids' additives.

If the presence of water or emulsification in the fluid is noticed, or if the fluid turns dark brown, the fluid should be changed as soon as possible.

HOLDING VALVE ASSEMBLIES

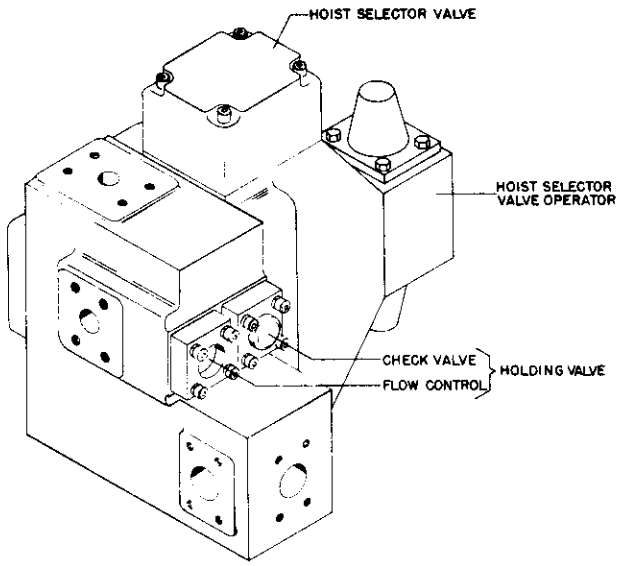


MAIN / WHIP HOLDING VALVE ASSEMBLY

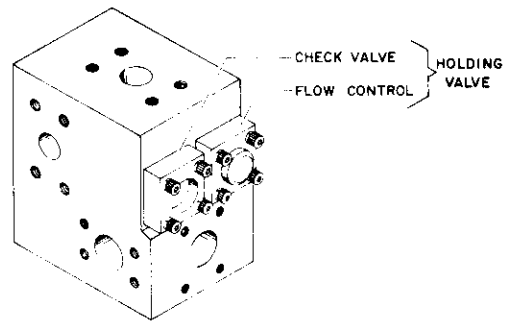


BOOM HOIST VALVE ASSEMBLY

Figure 21

LT-160019

## HYDRAULIC SCHEMATIC

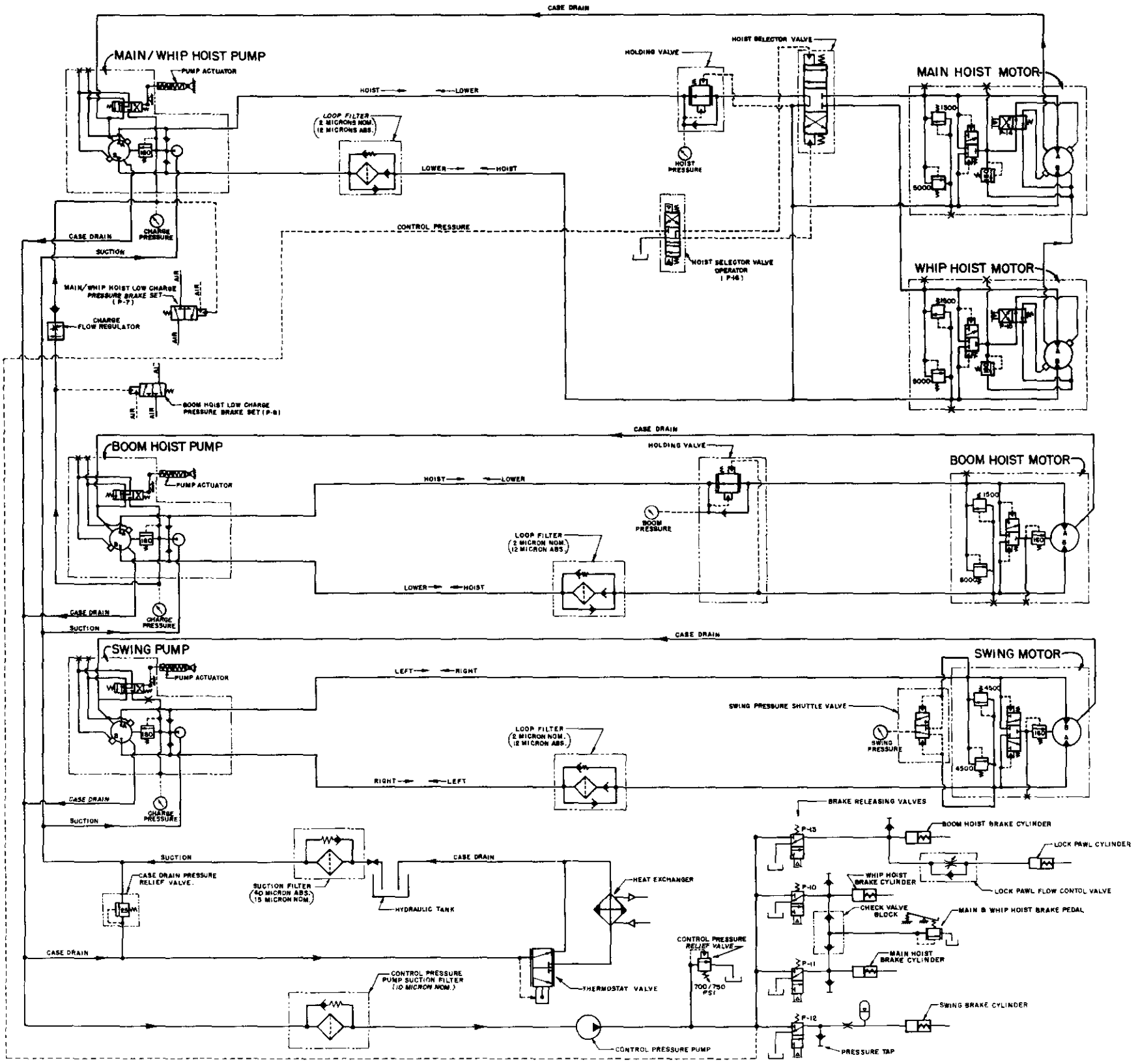


Figure 22

LT-160020



ARMCO National Supply Company
Division of Armco Inc

## HYDRAULIC CONTROL CIRCUIT

The purpose of this control circuit is to operate hydraulically the brakes, boom hoist lock pawl, and hoist selector valve.

The hydraulic fluid enters the control circuit from the case drain manifold block through the control pressure circuit filter and control pressure pump. Control pressure is maintained at 700/750 psi (48.3/51.7 bar) by the control pressure relief valve.

The circuit consists of a control pressure pump, control pressure relief valve, control pressure filter, brake releasing valves, check valve block, brake pedal, brake cylinders and lock pawl cylinder and hoist selector valve pilot valve.

CONTROL PRESSURE PUMP (Figure 13)

The control pressure pump is a fixed displacement gear pump mounted on the engine side of the triple pump drive housing. The suction line for the pump is connected through the filter to the top of the case drain manifold block. The high pressure discharge hose from the pump is routed to the control pressure relief valve and to the brake control manifold. See page 77 for trouble shooting procedures.

CONTROL PRESSURE RELIEF VALVE (Figure 23)

The control pressure relief valve maintains a 700/750 psi (48.3/51.7 bar) pressure in the control circuit. It is mounted to the crane frame below the hydraulic tank.

Control pressure is adjusted by observing the control pressure gage in the operator's cab while screwing the adjustment screw in to increase the pressure and out to lower the pressure. See page 77 for trouble shooting procedures.

CONTROL PRESSURE RELIEF VALVE

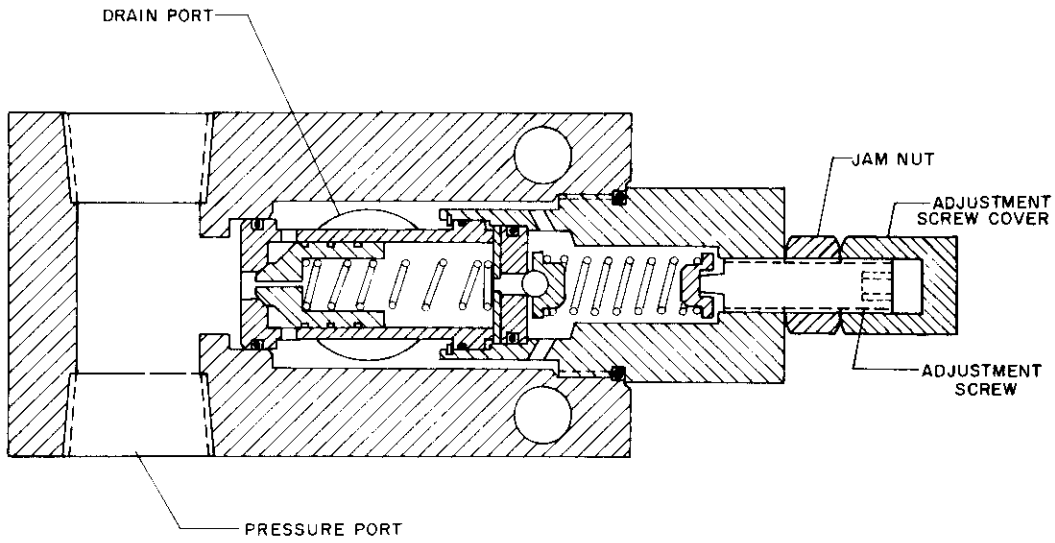


Figure 23 LT-160021

BRAKE RELEASING VALVES (Figure 26)

Directional control valves are used to direct control pressure fluid to the boom hoist lock pawl and all brake cylinders. The brake releasing valves are mounted to a manifold located above the swing gear reducer at the rear of the main frame. The brake releasing valves are pneumatically actuated, 2-position, 3-way valves equipped with manual over-rides to assist in trouble shooting.

HOIST SELECTOR VALVE OPERATOR (Figure 19)

The directional control valve (page 36) used to control the hoist selector valve is a pneumatically acutated, 3-position, 4-way valve mounted directly to the hoist selector valve. The spool of the hoist selector valve operator is controlled by air pressure from the selector valve (V-4) in the operator's cab. This small directional control valve then directs control pressure to one end of the hoist selector valve spool as determined by the choice of main or whip hoist.

CHECK VALVE BLOCK (Figure 27)

The check valve block is used to direct control pressure to the brake pedal when either the main or whip brake is released. The check valve block is located above the brake valve manifold, and contains two check valves and two pressure tap fittings. The pressure taps are provided for the quick and convenient checking of control pressure to the main or whip brake cylinders. A hose-gage assembly equipped with a companion fitting for the pressure taps is provided with each crane.

BRAKE PEDAL (Figures 1 and 30)

The brake pedal is used to dry wet brake linings on the main and whip hoists, and to remove rust from brake drum on cranes that have not been worked frequently. It also provides the operator with control of a load when the emergency load release function is actuated. The body of the brake pedal contains a direct acting, pressure regulating valve that permits pressure in the main and whip hoist cylinders to be exhausted when the brake pedal is depressed. See page 58 for adjustment procedure.

BRAKE AND LOCK PAWL CYLINDERS

These cylinders are all spring applied and hydraulically released by control pressure. Disc springs contained within a hoist brake cylinder set the brake when a control handle is in neutral. When a hoist control handle is moved out of neutral, control pressure is directed to the hoist brake cylinder where it compresses the springs and releases the brake. The swing brake incorporates 6 coil springs which are compressed as control pressure enters the brake cylinder. The swing brake is controlled by a valve (V-2) in the operator's cab. The lock pawl cylinder is returned by a tension coil spring. This spring is extended when control pressure enters the lock pawl cylinder. The lock pawl cylinder and boom hoist brake cylinders operate simultaneously, being controlled by the boom hoist control handle.

LOCK PAWL CYLINDER FLOW CONTROL VALVE (Figure 24)

A flow control valve is installed in the hydraulic line to the lock pawl cylinder. This valve permits free-flow into the cylinder but provides controlled flow from the cylinder. This flow characteristics provide quick pawl release when the control handle is moved out of neutral, but relatively slower pawl re-engagement when the control handle is returned to neutral. The slower rate of pawl re-engagement permits the boom hoist brake to set prior to the lock pawl and provides for smoother operation of the boom hoist shaft assembly. The flow control valve should be adjusted to regulate the rate of the cylinder's full rod extension (engagement stroke) to three seconds.

LOCK PAWL CYLINDER FLOW CONTROL VALVE

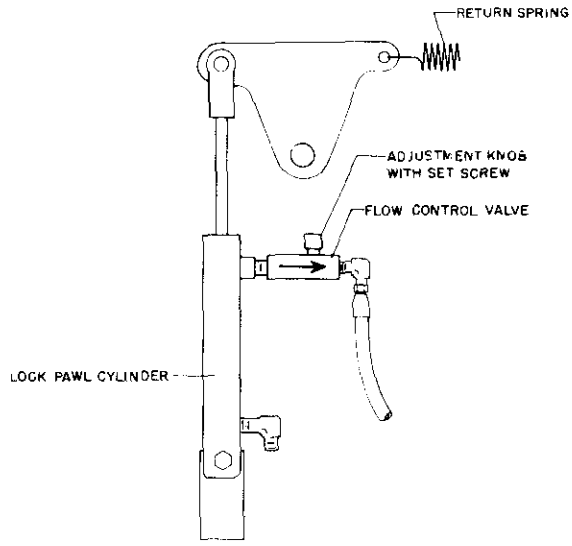


Figure 24 LT-160024

SWING BRAKE ACCUMLATOR AND ORIFICE (Figure 25)

To prevent the swing brake from momentarily setting when control pressure briefly drops below 700/750 psi (48.3/51.7 bar), the hose to the swing brake is orificed and a small accumulator is located between the orifice and brake. The charge on the accumlator should be 400/450 psi (27.6/31.0 bar) of dry nitrogen. The accumulator charge should be checked yearly.

SWING BRAKE ACCUMULATOR

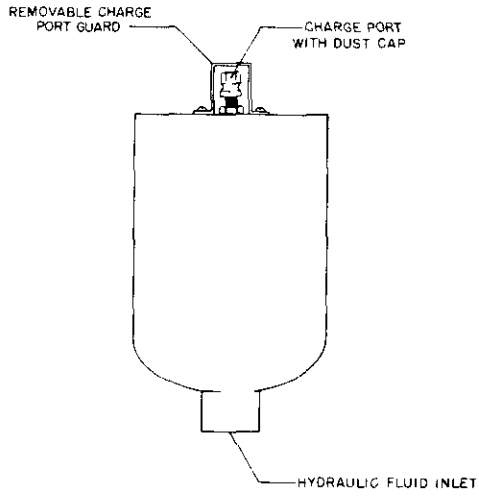


Figure 25 LT-160023

BRAKE RELEASING VALVES

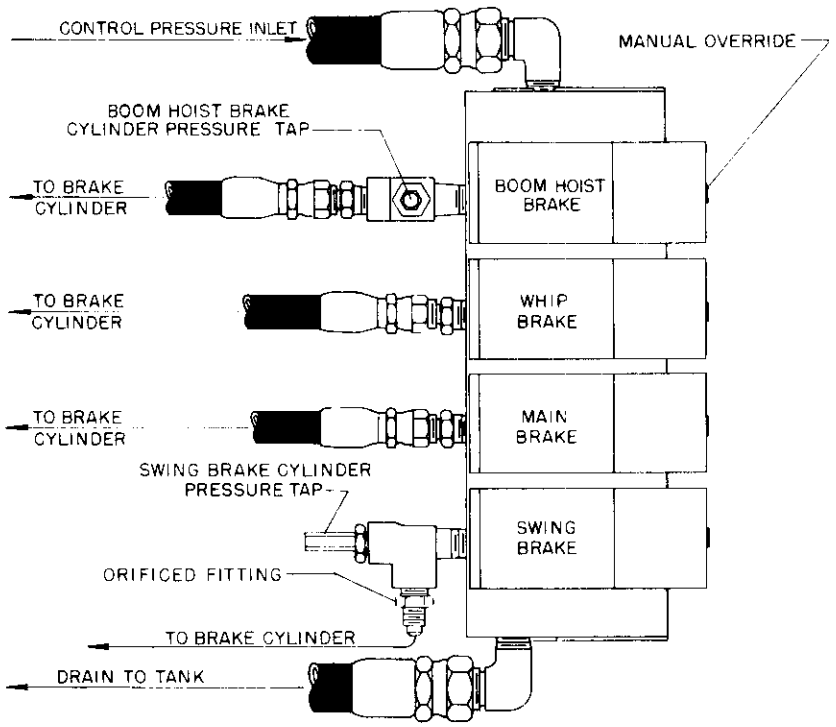


Figure 26 LT-160022

CHECK VALVE BLOCK

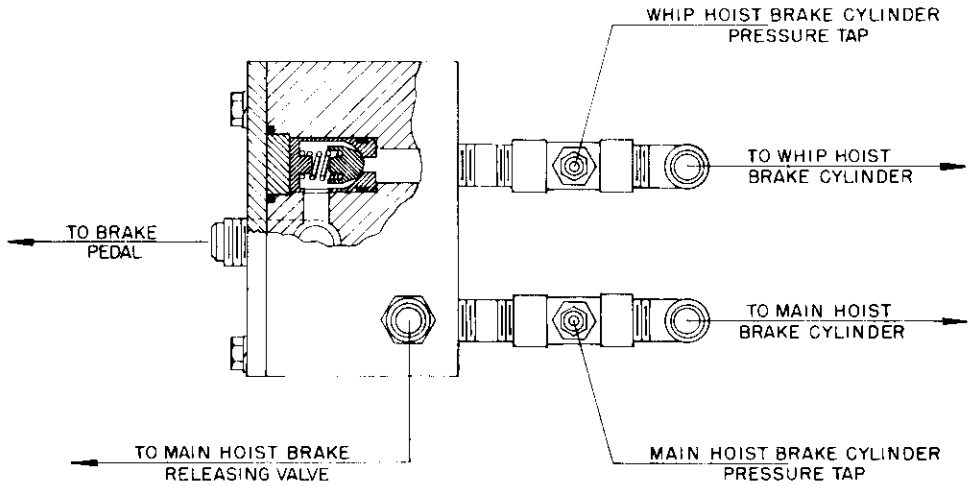


Figure 27 LT-160046

## AIR CONTROL SYSTEM

All control of the OS-435, hoisting, lowering and swinging, is accomplished using air control devices. With pressure regulating valves, manually operated valves, piston operated valves, diaphragm operated valves, shuttle valves and positioning cylinders, control of the hydrostatic drives is accomplished.

The controls were designed to meet the following requirements:

1. All brakes must set with the absolute loss of air pressure.
2. All hoist brakes must set and pump return to neutral with the loss of charge pressure.
3. The main and whip hoist brakes must set when the control handle is returned to neutral.
4. The boom hoist brake must set and the lock pawl must engage when the boom hoist control handle is returned to neutral.
5. The emergency brake set valve must apply all hoist brakes and the boom hoist lock pawl when depressed. The emergency brake set valve must also prevent the use of the hoist functions.
6. The emergency load release valve must release the main or whip brake (as determined by the position of the hoist selector control valve) and permit the load to "freefall" when depressed.

The air control system consists of the following:

### AIR COMPRESSOR (WHERE APPLICABLE)

Mounted to the engine is an air compressor. This compressor will supply an adequate air supply to operate the controls of the crane. The discharge pressure of the compressor should be regulated to a maximum of 110 psi (7.6 bar) and a minimum of 100 psi (6.9 bar).

### AIR COMPRESSOR UNLOADER (WHERE APPLICABLE)

The air compressor unloader regulates the discharge pressure and pressure differential of the air compressor. This valve is located near the rear of the crane beneath the engine and above the large air receiver. The unloader should be set to regulate the compressor discharge within the range of 100 to 110 psi (6.9 to 7.6 bar).

This valve serves to control the unloading mechanism which lifts the intake valves of the air compressor. The valve senses the air pressure in the large air reservoir. When the pressure reaches 110 psi (7.6 bar), the valve directs air pressure to the unloading mechanism in the compressor. When the pressure in the reservoir drops to 95 psi (6.6 bar), the valve shifts and permits the air pressure to the unloading mechanism to be exhausted. Without pressure to the unloading mechanism the compressor begins increasing the reservoir air pressure.

### UNLOADER VALVE ADJUSTMENT (Figure 28)

The unload pressure (maximum pressure) is adjusted by turning the pressure adjusting nut clockwise to increase the pressure and counterclockwise to decrease the pressure.

Changing the differential [difference between load (minimum pressure) and unload (maximum pressure) pressure] is accomplished by holding the lock nut closest to the body of the valve so it does not move, then turning the large nut next to it very slightly clockwise to increase the differential and counterclockwise to decrease the differential.

UNLOADER VALVE

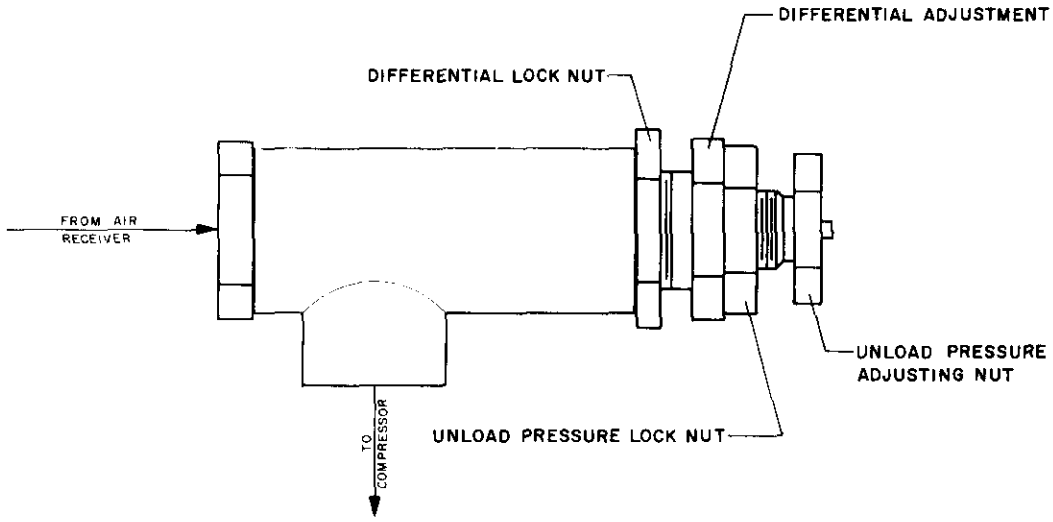


Figure 28 LT-160025

MAIN/WHIP HOIST CONTROL VALVE (C-4)

This is a pressure regulating valve. This valve is linked directly to the main/whip hoist control handle. As the hoist control handle is moved, so is the lever on the side of the valve. The further the control handle is moved out of the neutral position (in either the hoist or lower direction) the greater will be the discharge pressure of this valve. This control valve is located beneath the right-hand console in the operator's cab.

BOOM HOIST CONTROL VALVE (C-2)

Located beneath the left-hand console are two more pressure regulating valves. The lower valve is the boom hoist control valve. This valve is linked directly to the boom hoist control handle and boom hoist pedal. As the control handle or foot pedal is moved, so is the lever on the side of the valve. The further the control handle or pedal is moved out of the neutral position (in either the hoist or lower direction) the greater will be the discharge pressure of this valve.

SWING CONTROL VALVE (C-1)

The upper pressure regulating valve beneath the left-hand control panel is the swing control valve. This valve is linked directly to the swing control handle. As the control handle is moved, so is the lever on the side of the valve. The further the control handle is moved out of the neutral position (in either the swing left or swing right directions) the greater will be the discharge pressure of this valve.

MAIN/WHIP HOIST PUMP ACTUATING CYLINDER (DC-3)

Mounted to the main/whip pump displacement control valve (see Pump Control) is a positioning cylinder (pump actuating cylinder). This cylinder is designed to extend or retract in direct proportion to the pressure in the cylinder. The greater the pressure on either the piston or rod end of the cylinder the greater will be the extension or retraction of the rod. This cylinder piston rod is connected to the displacement control valve lever and functions to operate the displacement control valve.

BOOM HOIST PUMP ACUTATING CYLINDER (DC-2)

Mounted to the boom pump displacement control valve (see Pump Control) is a positioning cylinder (pump actuating cylinder). This cylinder is designed to extend or retract in direct proportion to the pressure in the cylinder. The greater the pressure on either the piston or rod end of the cylinder the greater will be the extension or retraction of the rod. This cylinder piston rod is connected to the displacement control valve and functions to operate the displacement control valve.

SWING PUMP ACTUATING CYLINDER (DC-1)

Mounted to the swing pump displacement control valve (see Pump Control) is a positioning cylinder (pump actuating cylinder). This cylinder is designed to extend or retract in direct proportion to the pressure in the cylinder. The greater the pressure on either the pison or rod end of the cylinder the greater will be the extension or retraction of the rod. This cylinder piston rod is connected to the displacement control valve lever and functions to operate the displacement control valve.

HOIST BRAKE AND BOOM HOIST LOCK PAWL RELEASING VALVE (P-10, P-11 and P-13)

Each of the three hoist brakes, main, whip and boom, are spring set and hydraulically released. When a control handle in the operator's cab is moved out of neutral, an air pressure signal is sent by P-19 or P-20 to the hoist brake releasing valve for the appropriate hoist. These valves are piston operated and require approximately 35 psi (2.4 bar) pressure to the piston for actuation. When the valves shift they direct control pressure in the brake cylinders and release the brakes. The three valves are mounted to the crane main frame above the swing gear reducer.

AIR PRESSURE REGULATOR (R-1)

On the right-hand rear control panel in the operator's cab is an air pressure regulator. This regulator supplies air to all the controls and should be set to maintain a pressure of 95 to 100 psi (6.6 to 6.9 bar) on the air pressure gage in the operator's cab.

EMERGENCY LOAD RELEASE VALVES (V-5 & V-6)

When depressed, these valves perform two functions. First, valve V-5 will signal the brake releasing valve of the hoist in use, as directed by the hoist selector control valve (V-3) in the operator's cab. When the brake releasing valve is signalled it shifts and supplies control pressure to the brake cylinder, releasing the brake. Second, valve V-6 shifts the hoist selector valve operator (P-11). This action establishes an unrestricted path for the flow of oil through the hoist motor in use, thus permitting the motor to free-wheel and the load to "free-fall". Indescriminate use of the load release will cause damage to the hydraulic system. This valve is for emergency use only.

EMERGENCY BRAKE SET VALVE (V-1)

This valve, when depressed, sets all hoist brakes and the boom hoist lock pawl. The air supply for all the hoist controls comes through the brake set valve. Therefore, when this valve is depressed no hoisting or lowering can be performed from the operator's cab. Swinging of the crane is possible while the emergency brake set valve is depressed. The valve is pulled to resume normal operation.

SWING BRAKE VALVE (V-2)

The swing brake valve controls the air supply to the swing control valve (C-1) and the swing brake releasing valve (P-12). When this valve is depressed, no air is available to operate the swing controls. When the valve is pulled up, air is supplied to the swing control valve and the brake releasing valve. Air pressure to the brake releasing valve causes the spool to shift and direct control pressure to the swing brake cylinder.

HOIST SELECTOR CONTROL VALVES (V-3 and V-4)

The hoist selector control valve (V-4) signals the hoist selector valve operator (P-16) and V-3 functions to determine which hoist brake (main or whip) will be released when the main/whip hoist control handle is moved out of the neutral position.

MAIN/WHIP HOIST LOW CHARGE PRESSURE BRAKE SET VALVE (P-7)

After passing through the emergency brake set valve, the control air supply for the main/whip hoist controls must pass through the low charge pressure brake set valve. This valve monitors charge pressure from the main/whip pump. If the charge pressure drops to an unacceptable level [approximately 125 psi (8.6 bar)], this valve closes off the air supply to the controls and permits the main or whip brake to set and the main/whip pump to return to neutral. If main/whip charge pressure is 125 psi (8.6 bar) or below, the cab controls will not operate the main or whip hoist or release the main or whip hoist brake.

BOOM HOIST LOW CHARGE PRESSURE BRAKE SET VALVE (P-8)

After passing through the emergency brake set valve, the control air supply for the boom hoist controls must pass through the low charge pressure brake set valve. This valve monitors charge pressure from the boom pump. If the charge pressure drops to an unacceptable level [approximately 125 psi (8.6 bar)], this valve closes off the air supply to the controls and permits the boom brake and lock pawl to set and the boom pump to return to neutral. If boom charge pressure is 125 psi (8.6 bar) or below, the cab controls will not operate the boom hoist or release the boom hoist brake and lock pawl.

ENGINE KILL CYLINDER (KC-1)

Mounted on the engine is a small brass cylinder. When the kill valve in the operator's cab is pulled up, air pressure goes to the piston end of this cylinder. If the kill valve (V-11) is depressed the air pressure is removed from this cylinder and a spring in the cylinder closes the fuel rack of the engine, killing the engine.

ENGINE THROTTLE CONTROL (C-3 and C-5)

The foot and hand throttle are both pressure regulating valves. The two valves work through a shuttle valve with the valve discharging the highest pressure controlling the engine speed. Both valves supply air pressure to the throttle actuator on the side of the engine.

KILL VALVE (V-11)

All cab control air passes through the kill valve. If this valve is depressed, none of the cab controls will function and the engine will not start. This valve must be pulled prior to starting the engine.

HYDRAULIC TANK LEVEL SENSING VALVE (V-17)

The level of the fluid in the hydraulic tank is monitored by using a float attached to a valve. When the fluid is at the proper operating level, the float is holding the valve in the open position which directs air pressure to the hydraulic tank low fluid level indicator. Air pressure to the indicator causes it to display "green". If the fluid level drops below an acceptable level, the float "closes" the valve and the pressure to the indicator is exhausted. Lack of pressure to the indicator causes it to display "red". If the indicator turns "red" during crane operation, operation of the crane should be stopped until fluid has been added to the tank.

CLUTCH CONTROL VALVE (V-9)

The clutch between the triple pump drive and engine is operated by a double acting cylinder. This cylinder receives air from the clutch control valve in the operator's cab. Pressure to the piston end of the cylinder engages the clutch and pressure to the rod end disengages the clutch. The control valve is pulled and held for five seconds to engage the clutch or pushed and held for three seconds to disengage the clutch.

ENGINE START VALVE (V-10)

The engine is started by discharging a large volume of compressed air through a vane type motor. The start valve in the operator's cab, when pulled, supplies air pressure to the air start relay valve on the engine. The relay valve (P-17) then opens and provides the required volume of compressed air to the air starting motor. The air from the engine start valve also engages the starting motor gearing with the engine flywheel.

BLOW DOWN VALVE (P-18)

The blow down valve is shifted each time the clutch is engaged. When the valve shifts it closes the air supply to the dryer and permits the dryer to "blow down". This action prolongs the life of the desiccant. The blow down valve will spring return to the open position when the clutch control valve is in the neutral position.

LOW AIR PRESSURE WARNING AND STOP VALVES (P-6 and P-5)

The main/whip hoist system is equipped with a system to prevent the main or whip hoist brake from releasing or the main/whip pump from pumping fluid if control air pressure drops below 50 psi (3.4 bar). This system prohibits the possibility of hydraulic system pressure surges or unexpected system response which may occur as air pressure drops below 50 psi (3.4 bar).

The operator will receive a warning of decreasing air pressure by the air supply low pressure indicator (I-5). When the air pressure falls to 75 psi (5.2 bar), the indicator turns from green to red. At this point all systems will continue to function until the pressure drops to 50 psi (3.4 bar).

The low are pressure warning valve (P-6) signals the air supply low pressure indicator. When the air pressure drops to 75 psi (5.2 bar), the valve exhaust the air to the indicator allowing the indicator to turn red. The low air pressure stop valve (P-5) closes off the air supply to the main/whip hoist control valve (C-4) and exhaust any residual air pressure to the system when the control air pressure drops to 50 psi (3.4 bar).

TWO SPEED HOIST CONTROL VALVES (P-14 and P-15)

The main hoist motor and whip hoist motor are equipped with a pheunatically operated, 4-way, 2-position valve to change the displacement of the motors. Two displacements provides for two motor speed ranges. Air pressure to the valves from the hoist speed selector valve (V-8) places the motors in the high speed (minimum displacement, low torque) range. Without pressure to the valves, the motors are in the low speed (maximum displacement, high torque) range.

CONTROL AIR MASTER VALVE (V-18)

To facilitate service to the air control system, a master shut off valve has been provided. This valve is on the large air receiver beneath the engine. The valve shuts off the air supply to the controls and exhausts the residual air pressure in the control system. The valve can be locked in the "closed" position with a pad lock to prevent unauthorized operation of the crane.

AIR RECEIVERS

The large (under the engine) and small (on the rear wall of the operator's cab) air receivers provide the crane with a residual air supply. The residual supply provides for engine starting and temporary crane operation should the normal air supply fail. The moisture should be purged from the receivers on a daily basis.

HOIST BRAKE AND BOOM HOIST LOCK PAWL RELEASING SIGNAL VALVES (P-19 and P-20)

Each of the three hoist brakes (main, whip and boom) are spring set and hydraulically released. When a control handle in the operator's cab is moved out of neutral an air pressure signal is sent to the diaphram of valve P-19 for the boom hoist, or P-20 for the main and whip hoist. Approximately 5 psi (.3 bar) pressure on the diaphram shifts the valve which then signals the appropriate brake releasing valve. An appropriate signal to the hoist brake and boom hoist lock pawl releasing valves will shift these valves which subsequently direct control pressure to the brake and lock pawl cylinders.

AIR SCHEMATIC

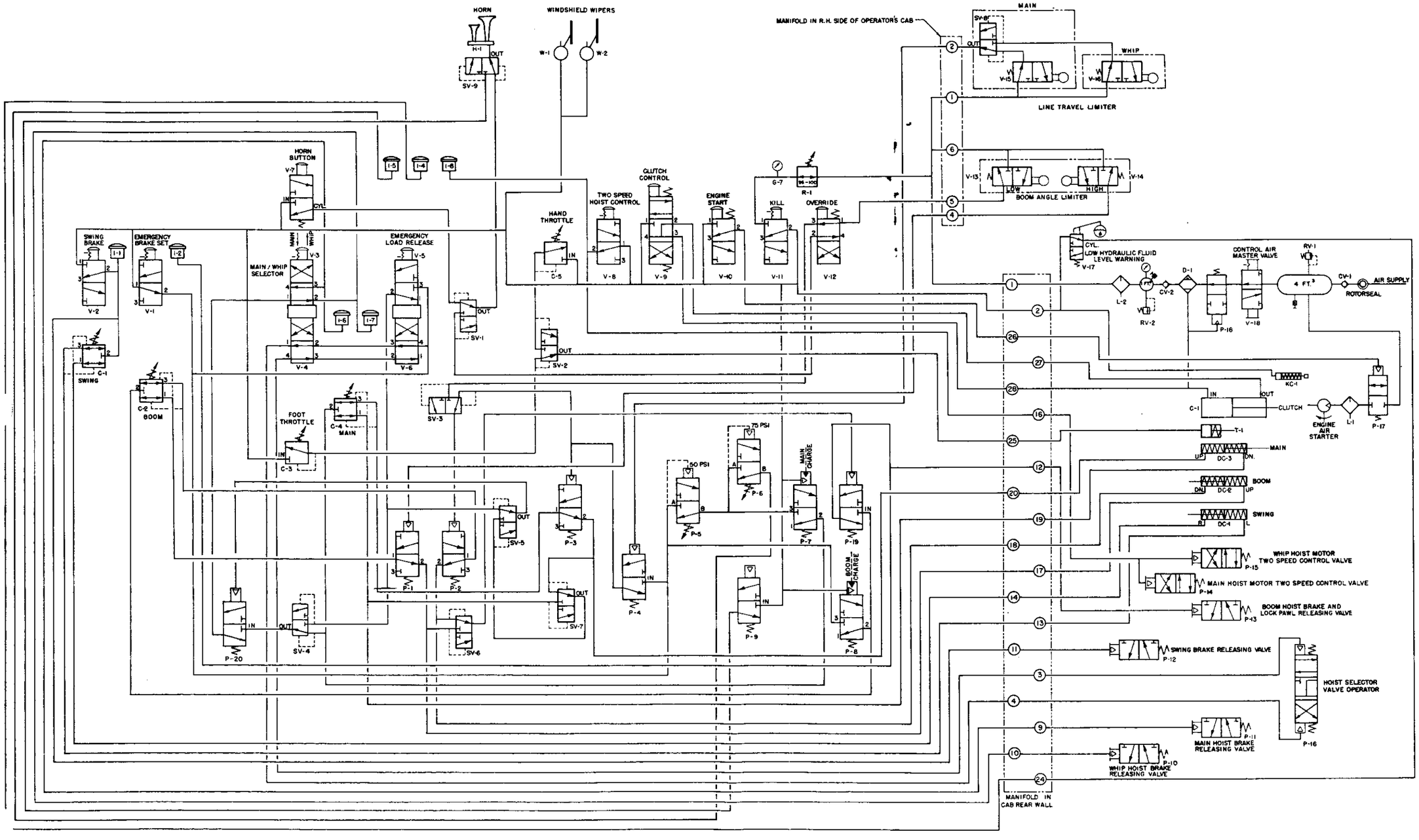


Figure 28

LT-160333

## NOTES

## OPERATION OF THE PRIMARY FUNCTIONS

MAIN LINE HOISTING A LOAD, LOWERING A LOAD AND POWERING DOWN

With the hoist selector control valve (Fig. 1, Item 30) pushed for "MAIN", the main hoist pheumatic system is made operable and the hoist selector valve operator (P-16) receives an air pressure signal, shifts and directs control pressure to shift the selector valve for operation of the main hoist. Control handle (Fig. 1, Item 20) movement, in either the hoist or lower direction, sends air pressure to the main hoist brake releasing valve (P-11) shifting the valve which directs control pressure into the main hoist brake cylinder. Pressure to the brake cylinder releases the brake. The movement of the control handle also directs air pressure to the "BRAKE OFF" indicator (I-6) which turns amber to indicate the main hoist brake has been signaled to release.

When the control handle is moved in the hoist direction the main/whip pump actuator (DC-3) receives air pressure on the piston end. The actuator then pushes the pump displacement control valve lever and causes the pump the "cam". When the pump cams high pressure (6000 psi max) fluid is pumped out of port "A" and through the tubing to the holding valve, through the hoist selector valve and then to port "A" of the main hoist motor. At port "A" the high pressure fluid shifts the shuttle valve in the motor valve manifold and then rotates the motor. The fluid leaves port "B" of the motor at charge pressure. Part of the fluid passes through the shuttle valve and charge pressure relief valve in the motor valve manifold and enters the motor case. Most of the fluid leaving the motor goes through the tubing to the tee in the hoist selector valve subplate, by-passes the in-line filter element and returns to port "B" of the main/whip pump. At pump port "B" the fluid from the motor mixes with fluid from the charge pump and then re-enters the main/whip pump.

When the control handle (Fig. 1, Item 20) is moved in the lower direction, with a load on the hook, the main/whip pumps actuator (DC-3) receives air pressure on the rod end. The actuator then pulls on the pump displacement control valve lever and causes the pump to "cam". When the pumps cams, fluid is discharged out of port "B" at charge pressure. As the fluid leaves the main/whip pump it mixes with fluid from the charge pump. The fluid now passes through the tubing and is filtered by the in-line filter. The filtered fluid now goes to the tee in the hoist selector valve subplate and then to port "B" of the main hoist motor. At port "B" part of the fluid passes through the shuttle valve and charge pressure relief valve in the motor valve manifold and enters the motor case. Most of the fluid enters the motor and is pressurized from charge pressure to high pressure (5000 psi max). (While lowering a load the motor is pressurizing the fluid. The load on the hook attempts to rotate the motor but the speed of the motor is limited by the amount of fluid passing through it. The pump serves to regulate the amount of fluid passing through the motor.) The high pressure fluid at motor port "A" shifts the shuttle valve and then passes through the tubing and hoist selector valve to the holding valve. At the holding valve the fluid must pass through the flow control valve before it continues on through the tubing to the main/whip pump "A" port. At pump port "A", the fluid re-enters the cylinder block and its pressure is dropped to charge pressure as it passes through the pump.

When the control handle (Fig. 1, Item 20) is moved in the lower direction, with no load on the hook, the main/whip pump actuator (DC-3) receives air pressure on the rod end. The actuator then pulls the pump displacement control valve lever and causes the pump to "cam". When the pump cams, high pressure (1500 psi max) fluid is pumped out of port "B" of the pump and passes through the tubing to the in-line filter. After filtration the oil continues on through the tubing to port "B" of the main hoist motor. The high pressure fluid then passes through the main motor, causing it to rotate, and leave port "A" of the motor at charge pressure. The fluid now passes through the tubing, hoist selector valve and holding valve re-entering the pump at port "A". During this operation the shuttle valve and charge pressure relief valve in the motor valve manifold do not have fluid passing through them and the only fluid entering the system from the charge pump is fluid replacing internal pump and motor leakage.

Returning the control handle to neutral exhausts the air pressure to the piston of the main hoist brake releasing valve (P-11) and the valve returns, exhausting the pressure in the brake cylinder. With the release of the pressure in the main hoist brake cylinder, the main hoist brake sets. At the same time, the air pressure to the pump actuating cylinder (DC-3) is exhausted and the main/whip pump returns to the neutral, no flow of fluid, position.

WHIP LINE HOISTING A LOAD LOWERING A LOAD AND POWERING DOWN

With the hoist selector control valve (Fig. 1, Item 30) pulled for "WHIP", the whip hoist pneumatic system is made operable and the hoist selector valve operator (P-16) receives an air pressure signal, shifts and directs control pressure to shift the selector valve for operation of the whip hoist. Control handle (Fig. 1, Item 20) movement in either the hoist or lower direction sends air pressure to the whip hoist brake releasing valve (P-10), shifting the valve which directs control pressure into the whip hoist brake cylinder. Pressure to the brake cylinder releases the brake. The movement of the control handle also directs air pressure to the "BRAKE OFF" indicator (I-7) which turns amber to indicate the hoist brake has been signaled to release.

When the control handle (Fig. 1, Item 20) is moved in the hoist direction the main/whip pump actuator (DC-3) receives air pressure on the piston end. The actuator then pushes the pump displacement control valve lever and causes the pump to "cam". When the pump cams, high pressure (5000 psi max) fluid is pumped out of port "A" and through the tubing to the holding valve, through the hoist selector valve and then to port "A" of the whip hoist motor. At port "A" the high pressure fluid shifts the shuttle valve in the motor valve manifold and then rotates the motor. The fluid leaves port "B" of the motor at charge pressure. Part of the fluid passes through the shuttle valve and charge pressure relief valve in the motor valve manifold and enters the motor case. Most of the fluid leaving the motor goes through the tubing to the tee in the hoist selector valve subplate, by-passes the in-line filter element and returns to port "B" of the main/whip pump. At pump port "B", the fluid from the motor mixes with the fluid from the charge pump and then re-enters the main/whip pump.

When the control handle (Fig. 1, Item 20) is moved in the lower direction, with a load on the hook, the main/whip pump actuator (DC-3) receives air pressure on the rod end. The actuator then pulls the pump displacement control valve lever and causes the pump to "cam". When the pump cams, fluid is discharged out of the port "B" at charge pressure. As the fluid leaves the main/whip pump it mixes with the fluid from the charge pump. The fluid now passes through the tubing and is filtered by the in-line filter. The filtered fluid now goes to the tee in the hoist selector valve subplate and then to port "B" of the whip hoist motor. At port "B" part of the fluid passes through the shuttle valve and charge pressure relief valve in the motor valve manifold and enters the motor case. Most of the fluid enters the motor and is pressurized from charge pressure to high prssure (5000 psi max). (While lowering a load the motor is pressurizing the fluid. The load on the hook attempts to rotate the motor but the speed of the motor is limited by the amount of fluid passing through it. The pump serves to regulate the amount of fluid passing through the motor.) The high pressure fluid at motor port "A" shifts the shuttle valve and then passes through the tubing and hoist selector valve to the holding valve. At the holding valve, the fluid must pass through the flow control valve before it continues on through the tubing to the main/whip pump "A" port. At pump port "A", the fluid re-enters the cylinder block and its pressure is dropped to charge pressure as it passes through the pump.

When the control handle (Fig. 1, Item 20) is moved in the lower direction, with no load on the hook, the main/whip pump actuator (DC-3) receives air pressure on the rod end. The actuator then pulls the pump displacement control valve lever and causes the pump to "cam". When the pump cams, high pressure (1500 psi max) fluid is pumped out of port "B" of the pump and passes through the tubing to the in-line filter. After filtration, the fluid continues on through the tubing to port "B" of the whip hoist motor. The high pressure fluid then passes through the whip motor, causing it to rotate, and leaves the motor port "A" at charge pressure. The fluid now passes through the tubing, hoist, selector valve, and holding valve re-entering the pump at port "A". During this operation the shuttle valve and charge pressure relief valve in the motor valve manifold do not have fluid passing through them and the only fluid entering the system from the charge pump is fluid replacing internal pump and motor leakage.

Returning the control handle (Fig. 1, Item 20) to neutral exhausts air pressure to the piston of the whip hoist brake releasing valve (P-10) and the valve returns, exhausting the pressure in the brake cylinder. With the release of the pressure in the whip hoist brake cylinder, the whip hoist brake sets. At the same time, the air pressure to the pump acctuating cylinder (DC-3) is exhausted and the main/whip pump returns to the neutral, no flow of fluid, position.

BOOM HOISTING, LOWERING AND POWERING DOWN

With the control handle (Fig. 1, Item 19) in neutral, the boom hoist brake is set and the lock pawl is engaged. Control handle movement, in either the hoist or lower direction, sends air pressure to the boom hoist brake releasing valve (P-13) shifting the valve which directs control pressure into the boom hoist brake cylinder

and boom hoist lock pawl cylinder. Pressure to the brake cylinder releases the brake. Pressure to the lock pawl cylinder releases the pawl. The movement of the control handle also directs air pressure to the "brake off" indicator (I-2) which turns amber to indicate the hoist brake has been signaled to release.

When the control handle is moved in the hoist direction, the boom pump actuator (DC-2) receives air pressure on the piston end. The actuator then pushes the pump displacement control valve lever and causes the pump to "cam". When the pump cams, high pressure (6000 psi max) fluid is pumped out of port "A" and through the tubing to the holding valve. From the holding valve the fluid goes through the tubing to port "A" of the boom hoist motor. At port "A" the high pressure fluid shifts the shuttle valve in the motor valve manifold and then rotates the motor. The fluid leaves port "B" of the motor at charge pressure. Part of the fluid leaving the motor passes through the shuttle valve and charge pressure releif valve in the motor valve manifold and enters the motor case. Most of the fluid leaving the motor goes through the tubing, by-passing the in-line filter element, to port "B" of the boom pump. At pump port "B" the fluid from the motor mixes with fluid from the charge pump and re-enters the boom pump.

When the control handle (Fig. 1, Item 19) is moved in the lower direction, the boom pump actuator (DC-2) receives air pressure on the rod end. The actuator then pulls the pump displacement control valve lever and causes the pump to "cam". When the pump cams, fluid is discharged out of port "B" at charge pressure. As the fluid leaves the boom pump it mixes with fluid from the charge pump. The fluid now passes through the tubing and is filtered by the in-line filter. The filtered fluid now goes through the tubing to port "B" of the boom hoist motor. At port "B", part of the fluid passes through the shuttle valve and charge pressure relief valve in the motor valve manifold and enters the motor case. Most of the fluid enters the motor and is pressurized from charge pressure to high pressure (6000 psi max). (While lowering the boom, the motor is pressurizing the fluid. The weight of the boom and load attempt to rotate the motor, but the speed of the motor is limited by the amount of fluid passing through it. The pump serves to regulate the amount of fluid passing through the motor.) The high pressure fluid at motor port "A" shifts the shuttle valve in the motor valve manifold and then pases through the tubing to the holding valve. At the holding valve, the fluid must pass through the flow control valve before it continues through the tubing to the boom pump "A" port. At pump port "A", the fluid re-enters the pump cylinder block and its pressure is dropped to charge pressure as it passes through the pump.

When the control handle (Fig. 1, Item 19) is moved in the lower direction, with the boom at high angles and no load on the hook, the boom pump actuator (DC-2) receives air pressure on the rod end. The actuator then pulls the pump displacement control valve lever and causes the pump to "cam". When the pump cams, high pressure (1500 psi max) fluid is pumped out of port "B" of the pump and passes through the tubing to the in-line filter. After filtration the fluid continues on through the tubing to port "B" of the boom motor. The high pressure fluid then passes through the boom motor causing it to rotate and leaves port "A" of the motor at charge pressure. The fluid now passes through the tubing to the holding valve and on to re-enter the pump at port "A". During this operation the shuttle valve and charge pressure relief valve in the motor valve manifold do not have fluid passing through them and the only fluid entering the system from the charge pump is fluid replacing internal pump and motor leakage.

Returning the control handle (Fig. 1, Item 19) to neutral exhausts the air pressure to the piston of the boom hoist brake releasing valve (P-13) and the valve returns, exhausting the pressure in the brake and lock pawl cylinders. With the release of pressure in the cylinders the boom brake and lock pawl set. At the same time, the air pressure to the pump actuating cylinder (DC-2) is exhausted and the boom pump returns to the neutral, no flow of fluid, position.

## SWING CIRCUIT OPERATION

With the swing handle (Fig. 1, Item 18) in neutral, pulling the swing brake valve (Fig. 1, Item 28) supplies air pressure to the swing brake releasing valve (P-12) piston and acutates the swing control system. The brake releasing valve shifts and directs control pressure to the swing brake, releasing the brake.

With the swing brake released, control handle (Fig. 1, Item 18) movement toward the operator (swing left) directs air pressure to the piston end of the pump actuator (DC-1). The actuator then pushes on the pump displacement control valve lever and causes the pump to "cam". When the pump cams, high pressure (4500 psi max) fluid is pumped out port "A" of the pump, through a hose by passing the in-line filter element, to

port "B" of the swing motor. At port "B" the high pressure fluid shifts the shuttle valve in the motor valve manifold. The fluid then passes through the motor causing rotation and leaves the motor at charge pressure. At motor port "A", part of the fluid passes over the shuttle valve and charge pressure relief valve in the motor valve manifold and enters the motor case. Most of the fluid leaving the motor returns to the swing pump "B" port through the hose. At pump port "B" the fluid from the motor mixes with fluid from the charge pump and re-enters the swing pump.

With the swing brake release, control handle (Fig. 1, Item 18) movement away from the operator (swing right) directs air pressure to the rod end of the pump actuator (DC-1). The actuator then pulls on the pump displacement control valve lever and causes the pump to "cam". When the pump cams high pressure (4500 psi max) fluid is pumped out of port "B" of the pump, through the hose to port "A" of the swing valve manifold. The fluid then passes through the motor causing rotation and leaves the motor at charge pressure. At motor port "B", part of the fluid passes over the shuttle valve and charge pressure relief valve in the motor valve manifold and enters the motor case. Most of the fluid leaving the motor passes through the in-line filter and returns to the swing pump "A" port through the hose. At port "A", the fluid from the motor mixes with fluid from the charge pump and re-enters the swing pump.

To reset the swing brake, the swing brake valve (Fig. 1, Item 28) is pushed. This action exhausts the air pressure to the swing control valve (C-1) and the piston of the swing brake releasing valve (P-12). When air pressure is removed from the brake releasing valve piston, the valve returns, exhausting the control pressure to the brake cylinder, permitting the brake to set.

## BRAKES

### HOIST BRAKES

The brakes on the three hoist drums are identical. These are on the right hand end of the hoist drums and are protected by easily removable rain shields. They are band type brakes on a 29-1/2" diameter drum that is an integral part of the shaft assembly.

Each of these brakes has a cylinder in the motor compartment that operates the brake through a rocker arm assembly. The rod end of these cylinders contains springs to maintain the brake in the set position. The springs of the brake cylinder are lubricated for protection against rust and wear. A reservoir is mounted to each cylinder to provide for lubricant displacement when the brake is released. The brakes are released by applying control pressure under the piston. This hydraulic pressure compresses the springs and releases the brakes.

Whenever a hoist control handle is returned to the neutral position, the brake sets automatically to hold the load and prevent creeping. When the control handle is moved out of neutral, in either the hoist or lower direction, the brake is fully released. During load lowering, the load is controlled entirely through the hydraulic system. This gives sure, precise control that makes the spotting of heavy loads safe and easy.

### HOIST BRAKE ADJUSTMENT (Fig. 31)

If the crane has not been working regularly it should be worked for a short period to dry the linings and remove any rust that may be on the drum. This can be done easily by hoisting the empty hook and boom (simultaneously) a few times with the brake pedal depressed.

The control pressure should be in the 700/750 psi (48.3/51.7 bar) range while adjusting the brakes.

The pressure at the main and whip brake cylinder pressure taps, Fig. 27, should also be checked. If this reads less than the control pressure the foot operated brake valve needs adjusting (see "Brake Pedal" page 58). This should be done before proceeding with brake adjustment.

The brake bands are suspended from the main frame with coil springs (two springs are used on the boom brake). These should be adjusted so that they life the upper most brake block clear of the drum about 1/32" (0.8 mm) when the brake is released.

There are also two threaded rods protruding from the main frame that restrain the brake band in the fore and aft direction when the brake is released. These should be set approximately 1/32" (0.8 mm) from the brake band when the brake is set.

When the adjustments have been made the brake can be adjusted with the brake adjusting nut. This requires two men; one to release the brakes by operating the crane and the other to adjust the brake.

There are two holes through the top of the main frame in line with the main and whip brake cylinders and one hole below the boom hoist wire rope drum. These holes give easy access to the brake adjusting nuts. A 1-1/2" deep socket is required for the adjustment. A brake adjusting tool which incorporates a 1-1/2" deep socket is shipped with each crane.

For proper hoist brake adjustment the brake cylinder rod travel should be 1/4" (6 mm). The brake should then be checked under load. If the load creeps down with the control handle in neutral, the brake band is not holding. If the brake is properly adjusted and will not hold the load, check the brake lining and drum for oil or the brake cylinder for broken springs.

SWING BRAKE (Fig. 32)

The swing brake is a caliper disc brake with the disc mounted on the top end of the input pinion of the swing gear reduction. It is spring applied, hydraulically released for fail-safe operation. The brake is adjusted by two nuts located under the lower spring retaining plate of the brake assembly. With the brake set, these nuts should be adjusted to set the space between the top of the lower spring retaining plate and the bottom of the cylinder housing at 1/8".

BRAKE PEDAL (Fig. 30)

When the emergency load release button is depressed, the load can be controlled by modulating the pressure in the end of the brake cylinders. This is done with the foot brake pedal (see Fig. 22 for a schematic of the brake system). The valve in the brake pedal is a direct acting pressure regulating valve. This valve controls the pressure to the main or whip brake cylinders when the pedal is depressed.

Fig. 30 shows the linkage adjustment between the foot pedal and the valve. With the brake pedal all the way up and while hoisting the whip line, the pressure at the whip hoist brake cylinder pressure tap (Fig. 27) should read the same as the control pressure (700/750 psi). With the brake pedal depressed all the way down and while hoisting the whip line, the pressure at the pressure tap should read 150 psi or less. To increase pressure lengthen the linkage. To decrease pressure shorten the linkage. The linkage is adjusted by loosening the jam nut. This is most easily accomplished by removing the hinge pin and then the upper half of the brake pedal. CAUTION: Do Not remove the plunger from the valve body or attempt to adjust the brake pedal when the clutch is engaged and the engine is running.

BRAKE PEDAL

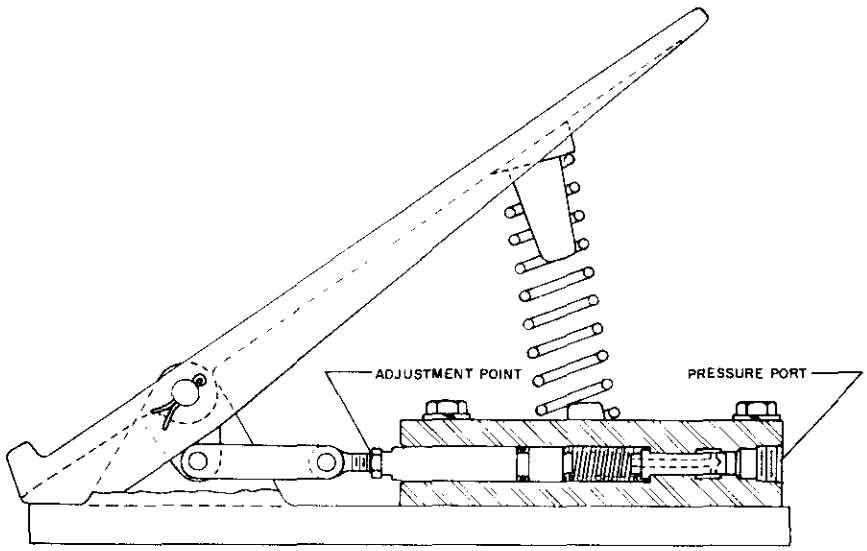


Figure 30 LT-160028

HOIST BRAKES

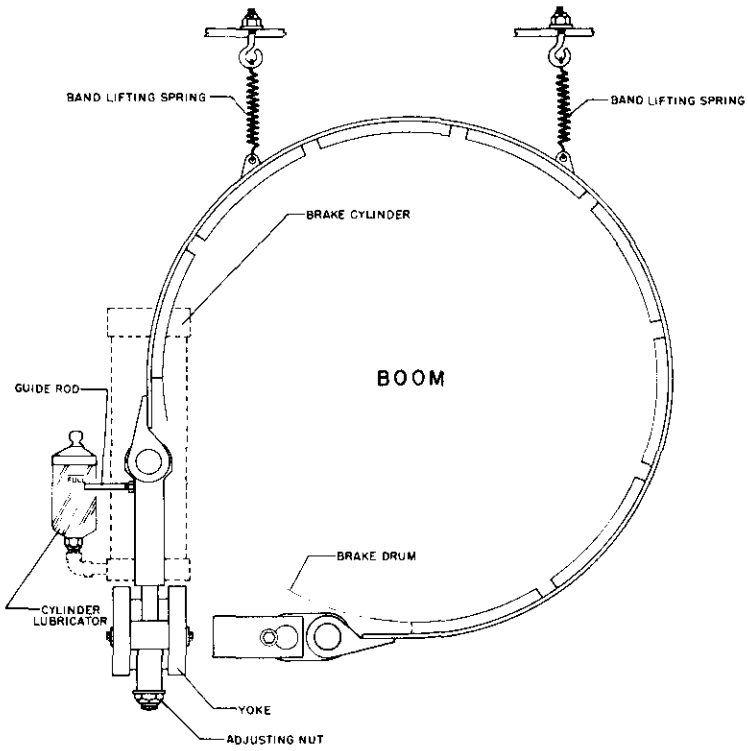


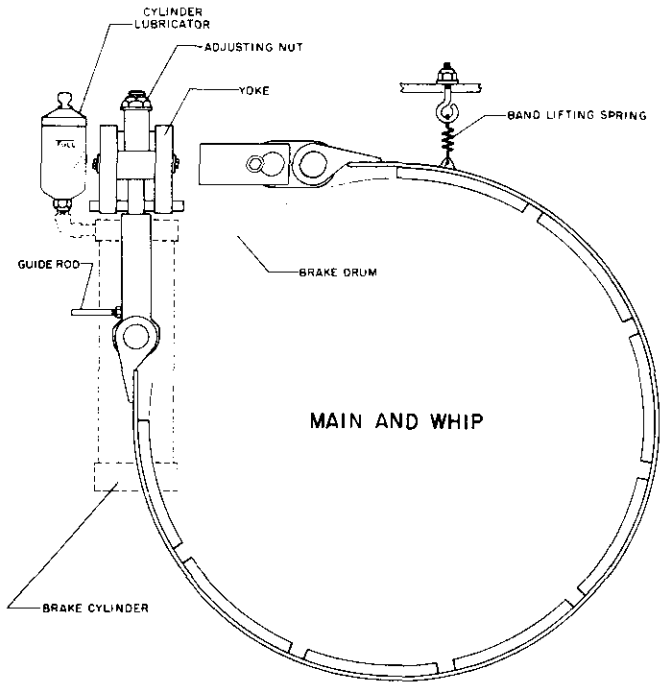


Figure 31

LT-160026

SWING BRAKE

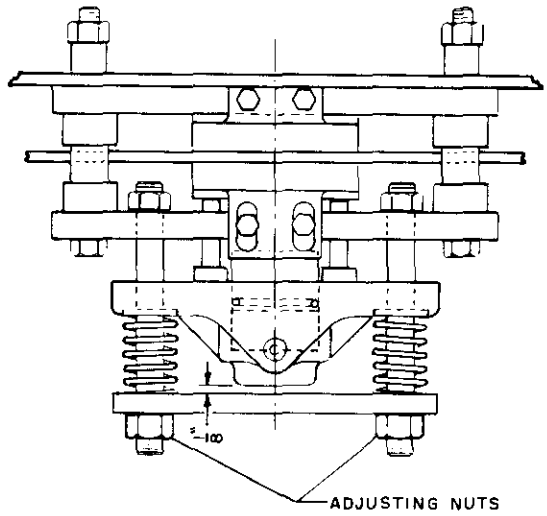


Figure 32

LT-160027

## SWING BEARING MAINTENANCE REQUIREMENTS

The swing bearing of the crane is a forged alloy steel ball type bearing with hardened and ground races. The inner race of the bearing is attached to the crane frame and the outer race is attached to the pedestal flange. The gear teeth of the bearing are an integral part of the outer race. The bearing must be mounted to the pedestal flange as directed by the National Supply Company technical standard TD-16001.

In order to assure trouble free operation of the swing bearing, several maintenance operations must be regularly performed. The bearing balls and races must be thoroughly lubricated once a week with a suitable grease as specified in the lubrication section. There are six lubrication fittings for the swing bearing in the wall of the main frame below the left-hand end plate of the main and whip hoist winches. Hoses are attached from these fittings to the inner race of the swing bearing for piping the grease to the bearing. The bearing and swing pinion teeth must have an adequate coating of a high quality lubricant such as Jet Lube, Inc. "Kopr-Kote" compound for lubrication and corrosion resistance.

A spot check of the tightness of the inner and outer race swing bearing bolts should be performed monthly. Every six months the inner and outer race bolts should be re-torqued. Loose bolts can lead to fatigue failure of the bolts and to detrimental binding and wear of the swing bearing balls and races. The required bolt torque is 2400 ft-lbs (332 m-kg) for 1-1/2" bolts and 5000 ft-lbs (692 m-kg) for 1-3/4" bolts.

## STRUCTURAL MAINTENANCE

The structural members of the OS-435 crane are coated with a zinc-base undercoat, epoxy second coat and acrylic top coat. The boom, main frame and gantry should be inspected for deformed, cracked, corroded or missing members on a monthly basis. Corroded areas should be cleaned of corrosion, properly primed and painted. Cracked and deformed members should be repaired. Missing members should be replaced. Prior to conducting structural repair or replacement the National Supply Company should be contacted for feasibility of repair, material specifications and welding procedures.

Crane assembling cap screws should be checked for tightness every six months. The following chart can be used as a guide for proper torque requirements.

CRANE ASSEMBLING SCREW TORQUE VALUES IN FT-LBS*

| SCREW SIZE INCHES |  GRADE 2 |  GRADE 5 |  GRADE 7 |  GRADE 8 |  HEX SOCKET HEAD |
|---|---|---|---|---|---|
| 1/4 | 6 (.8) | 9 (1.2) | 12 (1.6) | 13 (1.8) | 14 (1.9) |
| 5/16 | 11 (1.5) | 18 (2.5) | 24 (3.3) | 28 (3.9) | 30 (4.1) |
| 3/8 | 19 (2.6) | 31 (4.3) | 43 (5.9) | 46 (6.4) | 50 (6.9) |
| 7/16 | 30 (4.1) | 50 (6.9) | 69 (9.5) | 75 (10) | 81 (11) |
| 1/2 | 45 (6.2) | 75 (10.4) | 106 (14) | 115 (15) | 121 (16) |
| 9/16 | 66 (9.1) | 110 (15) | 150 (20) | 165 (22) | 176 (24) |
| 5/8 | 93 (12.9) | 150 (20) | 209 (28) | 225 (31) | 240 (33) |
| 3/4 | 150 (20.7) | 250 (34) | 350 (48) | 370 (51) | 395 (54) |
| 7/8 | 202 (27.9) | 378 (52) | 550 (76) | 591 (81) | 629 (86) |
| 1 | 300 (41.5) | 583 (80) | 825 (114) | 893 (123) | 964 (133) |
| 1-1/8 | 474 (65.5) | 782 (108) | 1304 (180) | 1410 (195) | 1523 (210) |
| 1-1/4 | 659 (91.1) | 1097 (151) | 1815 (251) | 1964 (271) | 2150 (293) |
| 1-3/8 | 884 (122.3) | 1461 (202) | 2400 (331) | 2400 (331) | 2400 (331) |
| 1-1/2 | 1057 (146.2) | 1748 (241) | 2400 (331) | 2400 (331) | 3000 (414) |
| 1-5/8 | 1448 (200) | 2392 (330) | 3985 (551) | 4311 (596) | 4655 (643) |
| 1-3/4 | — | — | 5000 (691) | — | — |

*VALUES IN PARENTHESES ARE IN M-Kg.

LT-160044

## OVER CENTER CLUTCH

ADJUSTMENT

The clutch adjust collar on the over-center units is of the threaded type and is easily adjusted for normal service and wear of the clutch linings by rotating by hand until the proper operating tension is obtained. In order to retain the adjustment and prevent the collar from coming out of adjustment during operation, a spring-loaded thumb latch is provided. To rotate the collar it is necessary to press down on the latch, thus lifting the end of the latch clear of the slot in which it seats. After adjustment the latch is released and should engage the collar with a locking action that will prevent the collar from turning in operation.

If the handle lever jumps out of the engaged position, or if the clutch overheats and does not pull the load, depress the adjust collar lock plunger and rotate the toggle assembly clockwise until the hand lever requires a distinct pressure and over-center snap to engage. New clutch facings may require several adjustments until they are properly "worn-in", that is, until high spots on the linings are removed.

IMPORTANT POINTS FOR SUCCESSFUL OPERATION

1. Avoid overloads. Do not exceed maximum rating.
2. Do not exceed recommended speeds.
3. Be sure clutch does not drag or wipe when disengaged. This causes overheating.
4. Align clutch carefully.
5. Lubricate shift collar when necessary, but not more than good judgment and experience indicate.

LUBRICATION

These units are shipped already greased with a litholine multi-purpose grease. When necessary to add lubricant use any high grade, lithium-base gun grease free from fillers and having low temperature pumpability, water resistance, mechanical stability and heat resistance characteristics. Amount of lubrication depends upon daily use. DO NOT OVER-LUBRICATE. Over-lubrication can result in overheating of the bearing and grease getting on the linings.

The toggle assembly should be lubricated on a schedule appropriate to prevent corrosion and binding. The shift sleeve and shaft should be lubricated on a schedule consistent with the toggle assembly. The toggle assembly, clutch sleeve and shaft should be lubricated with a light weight petroleum lubricant with good lubricating and protecting properties. Do not allow lubricant to contaminate the clutch linings.

## NOTES

## BOOM ANGLE LIMITER

Installed on the OS-435 crane is a pneumatically operated boom angle limiter system which automatically prevents hoisting or lowering of the boom whenever the desired high or low boom angle is reached. The two limiting devices operate independently of each other thus permitting the boom to be lowered when the high limit is reached or raised when the low angle is reached. The system consists of two cams and two air valves mounted at the right-hand boom foot clevis, and two air valves in the cab. The cams are rotated by means of a shaft connected to a drive fork. The drive fork engages a pin that is attached to the boom foot casting.

### OPERATION

The boom angle limiter system is actuated whenever the boom is raised or lowered far enough for one of the cams to depress the roller arm of an air valve. Depressing the arm of the air valve (V-13 or V-14) permits air to pass into the actuating cylinder or either valve P-1 or valve P-2. Whenever valve P-1 (Boom Up Stop) or valve P-2 (Boom Down Stop) shifts, if prohibits the boom hoist control valve from releasing the boom hoist brake and lock pawl, and from camming the boom pump. The shifting of valve P-1 or valve P-2 also permits the pump to return to the neutral position and the boom hoist brake and lock pawl to set.

### LOW BOOM LIMIT OVERRIDE

The low boom limit override valve (V-12) permits the operator to place an unloaded boom into a rest which may be below the minimum working angle of the boom. The valve exhausts the air pressure to the actuating cylinder of valve P-2 and directs compressed air to the air horn. The valve must be held up during boom lowering and the horn will sound as long as the valve is up.

### ADJUTMENT (Figure 33)

The maximum high and low angles to which the boom can be raised or lowered are determined by the position of the two cams mounted on the rotating shafts. One of the cams limits the hoisting of the boom, and the other cam limits the lowering of the boom.

CAM ADJUSTMENT PROCEDURE:

1. Raise or lower the boom to the desired throw-out or limiting angle.
2. Loosen cam adjustment set screw.
3. Rotate the cam unti the arm of the air valve is depressed and the air valve in the cab is shifted.
4. Retighten the adjustment set screw.
5. Operate the boom to check the adjustment.

NOTE: The maximum allowable load working angle is 79°. The minimum allowable load working boom angle is 0°.

## BOOM ANGLE LIMITER

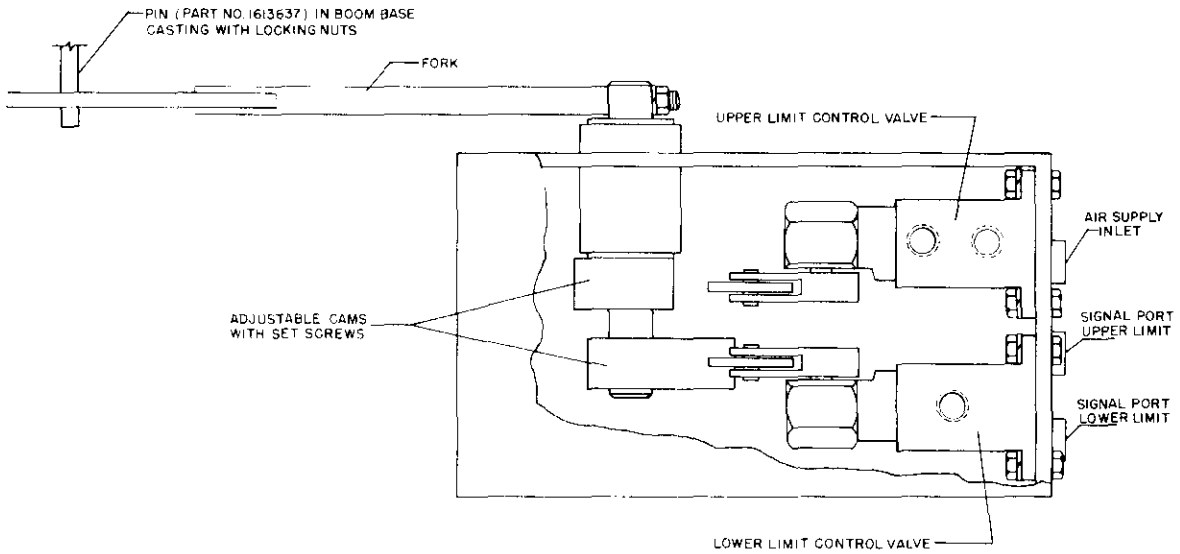


Figure 33

LT-160029

## LINE TRAVEL LIMITER

The line travel system (boom saver) is an accessory mounted on the crane to prevent a hook or block from accidentally being run into the boom point sheaves. There are two ways a hook or block can be pulled into the boom point sheaves: 1) Hoisting the main or whip until the hook or block engages the boom point sheaves and 2) Lowering the boom without compensating for the increasing distance between the boom point sheaves and the main and whip winches. As the boom is lowered, the distance between the boom point and the main and whip winches increases. If the main and whip control handles are in neutral and the boom is being lowered, the line length between the boom point and winches must increase. This causes line take-up on both the main and whip systems and therefore, the main block and whip hook will approach the boom point, eventually striking the point and causing damage.

The line travel limiter system prevents: 1) Hoisting the whip hook into the sheave extension sheave, 2) Hoisting the main block into the boom point sheaves and 3) Lowering the boom into the whip hook or the main block.

The line travel limiter system consists of two valve assemblies, one shuttle valve, two valve assembly supports, two hoist line followers and the necessary tubing, fittings, and chain.

### OPERATION

The hoist line followers are supported by 1/4" (6 mm) chain from the clevis on the end of the valve assemblies. The weight of the follower holds the valve assembly clevis down which closes the valve in the valve assembly. Air pressure is supplied the valve assemblies by 3/8" (10 mm) tubing. Any time either follower is lifted so as to remove its weight from the valve assembly clevis, air pressure will be sent back down the boom through 1/4" (6 mm) tubing to valve P-4 in the operator's cab. This valve then shifts and permits air pressure to go to the pilot cylinders of valves P-2 and P-3 in the operator's cab. Valve P-3 then shifts and prohibits air pressure from the hoist control valve C-4 from releasing the hoist brake or camming the main/whip pump to hoist the block or hook. When valve P-3 shifts, the hoist brake sets and the main/whip pump swashplate returns to the neutral position. When valve P-2 shifts, the boom hoist brake and lock pawl set, and the boom pump swashplate returns to the neutral position to prohibit lowering of boom. At this point, the hoist handle may be moved forward to lower the hook or block, but no further hoisting or boom lowering can be accomplished. Once the block or hook has been lowered, the line follower closes the valve in the valve assembly and permits resumption of normal crane operation.

NOTE: If either line follower has been lifted, both the main and whip hoists will be prevented from hoisting and the boom will be prevented from lowering.

### INSTALLATION

Figure 33 shows the air piping diagram and the location of the components used for the line travel limiter system. The valve assemblies should first have the necessary fittings and the shuttle valve installed on the main hoist valve assembly support (Part #1615997) is mounted in the forward position of the sheave extension. The main hoist valve assembly support is mounted behind the whip hoist valve assembly support. Mounting plates for both valve assembly supports are integral parts of the sheave extension. The valve assemblies are attached to the supports by a pin (Part #1615992) and a cotter pin (Part #G-6501620-S).

The whip hoist line follower is suspended by a 12'-0" (3.7 m) long piece of 1/4" (6 mm) chain using open links to attach the chain to the follower and clevis. The main hoist line follower is suspended by a 8'-0" (2.4 m) piece of 1/4" (6 mm) chain using open links to attach the chain to the follower and clevis.

The air supply tubing [3/8" (10 mm) Synflex] and signal tubing [1/4" (6 mm) Synflex] should be attached as shown in Figure 33. The tubing should be placed in the tray along the left side of the boom and secured by nylon wire ties. The hoses should be positioned to prevent the possibility of excessive wear or detrimental binding.

A striker plate (Part #1615845) must be welded to the main block to provide a striking surface for the main hoist line follower. This plate is shipped separately from the main hoist block and is to be welded in place during the limiter installation.

VALVE ADJUSTMENT PROCEDURE

The air valve in the valve assemblies are to be adjusted to meet the following requirements:

1. The adjusting nut should be turned one way or the other until the spring in the valve assembly causes the valve roller to be pressed completely down without any weight on the clevis as shown in Figure 33A. Air will then flow from port "A" to port "O". This is the "shutdown" position.

2. When the clevis is pulled down, the hex screw head should not be touching the roller but be as close as possible. Supply air pressure at port "A" is now blocked from port "O". This is the normal operating position.

   NOTE: Normally, adjustments are made without being able to see inside the valve assembly. Therefore, several trial and error attempts have to be made before good adjustment is obtained. This is a simple task since the adjustment can be tested by pulling down on the clevis by hand and checking to see if the applicable hoist function operates properly. When the clevis is released, the corresponding hoist function should be shut down. Also, if the adjusting nut is turned too far up, the system will be rendered inoperative. This should be avoided since it results in a dangerous operating condition.

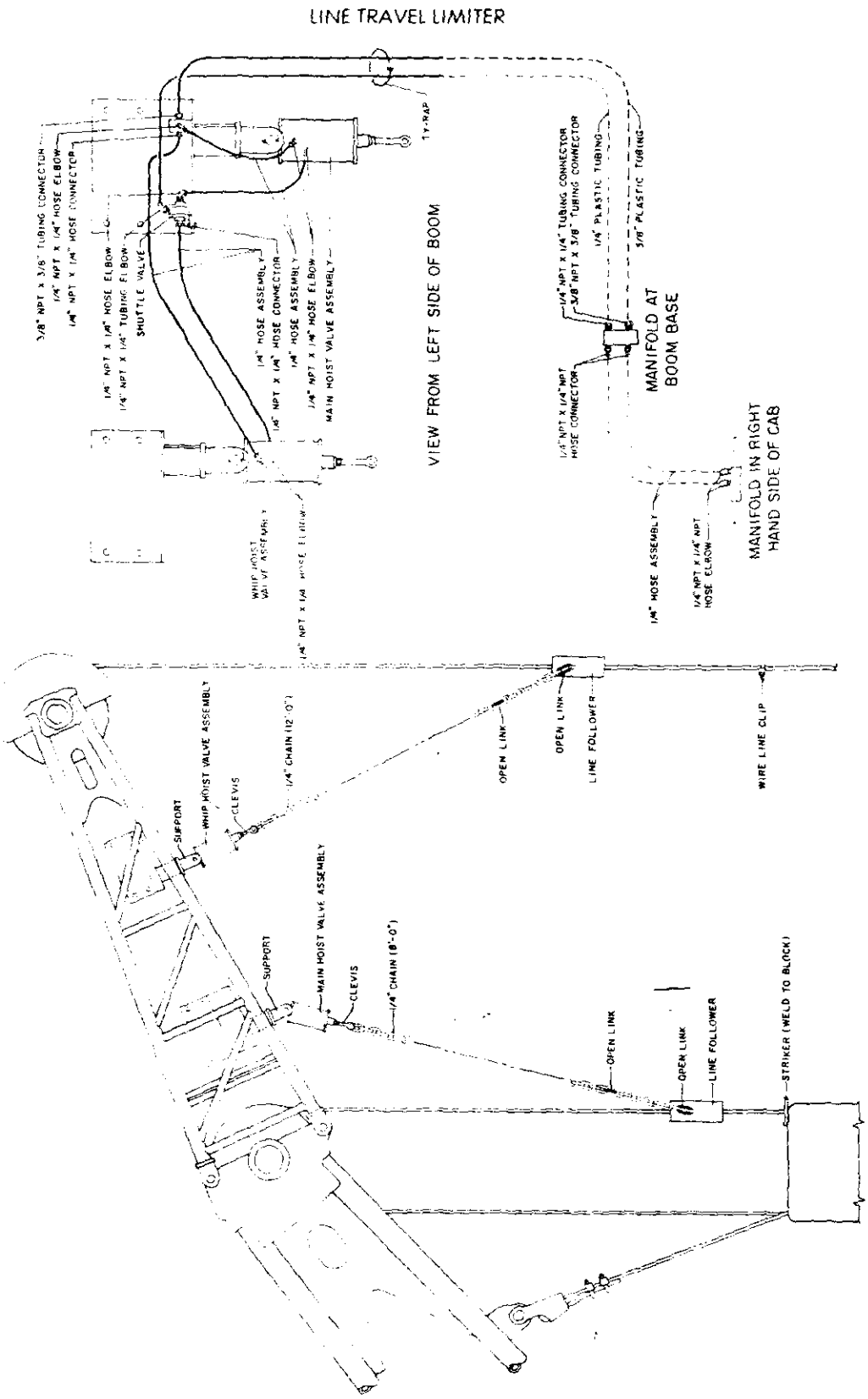
LINE TRAVEL LIMITER
VIEW FROM LEFT SIDE OF BOOM
MANIFOLD AT BOOM BASE
MANIFOLD IN RIGHT HAND SIDE OF CAB
TY-RAP
3/8" NPT x 3/8" TUBING CONNECTION
1/4" NPT x 1/4" HOSE ELBOW
1/4" NPT x 1/4" HOSE CONNECTOR
1/4" NPT x 1/4" HOSE ELBOW
1/4" NPT x 1/4" TUBING EL BOW
SHUTTLE VALVE
1/4" HOSE ASSEMBLY
1/4" NPT x 1/4" HOSE CONNECTOR
1/4" HOSE ASSEMBLY
1/4" NPT x 1/4" HOSE ELBOW
MAIN HOIST VALVE ASSEMBLY
1/4" NPT x 1/4" TUBING CONNECTOR
3/8" NPT x 3/8" TUBING CONNECTOR
1/4" PLASTIC TUBING
3/8" PLASTIC TUBING
1/4" NPT x 1/4" NPT HOSE CONNECTOR
1/4" HOSE ASSEMBLY
1/4" NPT x 1/4" NPT HOSE ELBOW
WHIP HOIST VALVE ASSEMBLY
1/4" NPT x 1/4" HOSE ELBOW
SUPPORT
WHIP HOIST VALVE ASSEMBLY
CLEVIS
1/4" CHAIN (12'-0")
OPEN LINK
OPEN LINK
LINE FOLLOWER
WIRE LINE CLIP
SUPPORT
MAIN HOIST VALVE ASSEMBLY
CLEVIS
1/4" CHAIN (8'-0")
OPEN LINK
OPEN LINK
LINE FOLLOWER
STRIKER (WELD TO BLOCK)

Figure 33

# LINE TRAVEL LIMITER ADJUSTMENT

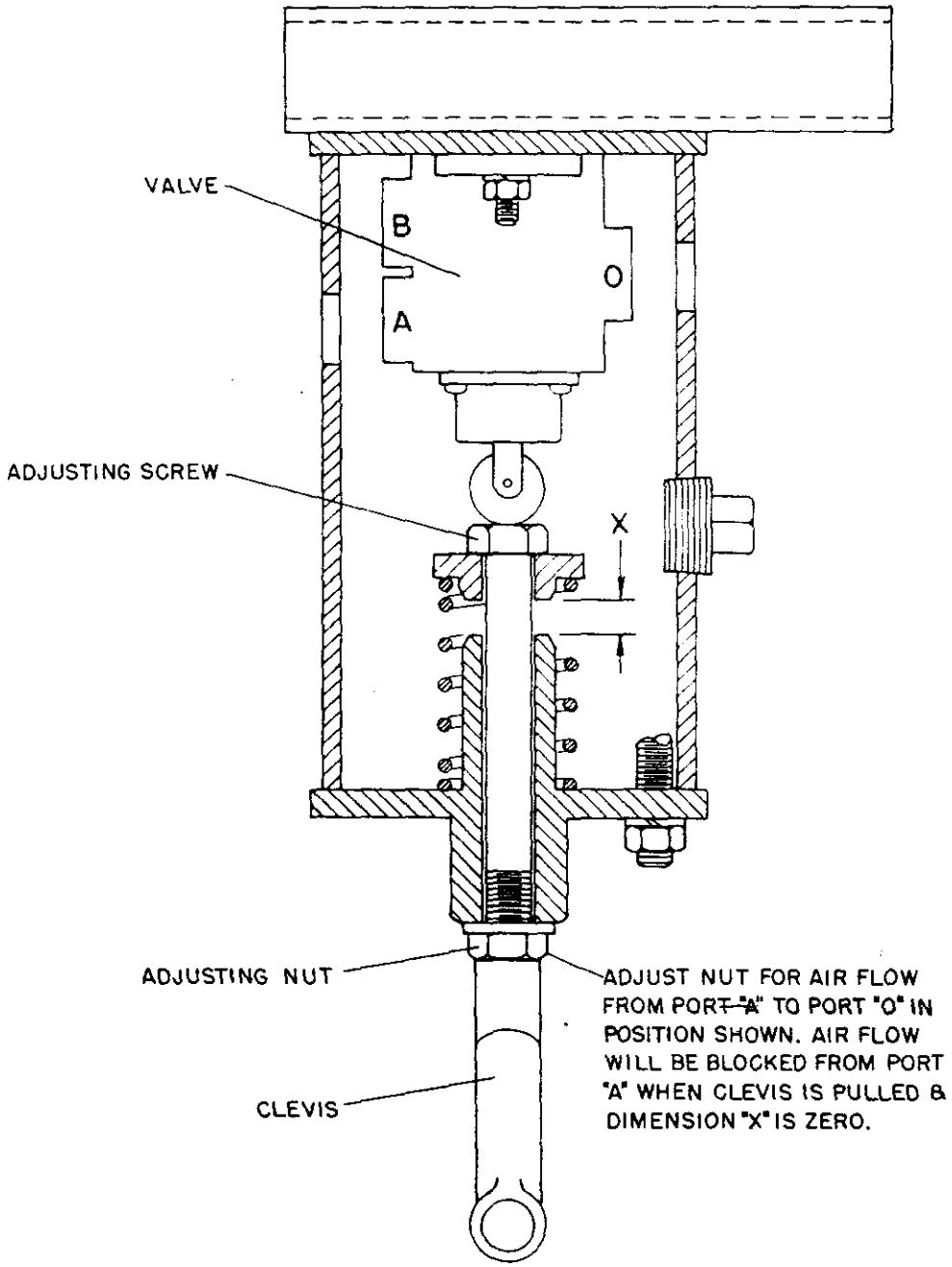


FIGURE 33A

## REEVING AND WIRE ROPE SPECIFICATIONS

The following charts show the wire rope size and type required for the three hoist winches of the crane. Also shown are figures depicting the correct method of wire rope reeving from the winches to the hoist blocks. The wire ropes are anchored to the brake band side of the winch by six-bolt clamps secured to the brake drum. When anchoring the wire rope check to make sure that the clamp has the correct part number as shown in Figure 35, 36, and 37.

The wire rope should be periodically inspected for signs of wear, broken wires, and corrosion. The drum and sheaves should also be examined periodically for wear and corrugations. Routine lubrication of the wire rope is also essential in order to prevent corrosion and minimize friction and wear.

| MAIN HOIST | | | | | | | | | |
|---|---|---|---|---|---|---|---|---|---|
| LENGTH OF MAIN HOIST WIRE ROPE RECOMMENDED FOR: | | | | | | | | | |
| | | A. IN TRANSIT OR SHIPYARD DRAFT | | | | B. NORMAL OPERATING DRAFT | | | |
| BOOM LENGTH FT | (m) | ℄ BOOM POINT TO WATER LINE FT | (m) | ROPE WITH 6 LINE REEVING* FT | (m) | ℄ BOOM POINT TO WATER LINE FT | (M) | ROPE WITH 6 LINE REEVING FT | (m) |
| 60 | (18.3) | 190 | (57.9) | 1500 | (457) | 130 | (39.6) | 1200 | (366) |
| 80 | (24.4) | 210 | (64.0) | 1650 | (503) | 150 | (45.7) | 1300 | (396) |
| 100 | (30.5) | 230 | (70.0) | 1800 | (549) | 170 | (51.8) | 1400 | (427) |
| 120 | (36.6) | 250 | (76.2) | 1900 | (579) | 190 | (57.9) | 1600 | (488) |
| 140 | (42.7) | 270 | (82.3) | 2200 | (671) | 210 | (64.0) | 1700 | (518 |
| Main Hoist Drum Capacity 2100 Ft. (640 m) of 7/8 inch (22.2 mm) Wire Rope. Wire Rope is 7/8 inch (22.2 mm) 6 x 26 Warrington-Seale, Right Regular Lay, Extra Improved Plow Steel, Independent Wire Rope Core, Preformed.† | | | | | | | | | |
| *Length of wire rope may be changed for installations using other than 6 line reeving on main hoist block. | | | | | | | | | |

| WHIP LINE HOIST | | | | |
|---|---|---|---|---|
| Standard Lengths of Wire Rope Normally Furnished | | | | |
| Boom Length | | Wire Rope Length | | Wire Rope is 1 Inch (25.4 mm), 19 x 7 Nonrotating, Extra Improved Plow Steel, Independent Wire Rope Core, Preformed.† |
| 60 Ft. | (18.3 m) | 750 Ft. | (229 m) | |
| 80 Ft. | (24.4 m) | 750 Ft. | (229 m) | |
| 100 Ft. | (30.5 m) | 800 Ft. | (244 m) | |
| 120 Ft. | (36.6 m) | 800 Ft. | (244 m) | |
| 140 Ft. | (42.7 m) | 850 Ft. | (259 m) | |
| Whip Line Drum Capacity is 1600 Ft. (488 m) of 1 inch (25.4 mm) Non-Rotating Wire Rope | | | | |

| BOOM HOIST SUSPENSION 10-PART CONTINUOUS | | | | |
|---|---|---|---|---|
| Boom Length | | Rope Length | | |
| 60 Ft. | (18.3 m) | 800 Ft. | (244 m) | Wire Rope is 1 inch (25.4 mm), 6 x 26 Warrington-Seale, Right Regular Lay, Extra Improved Plow Steel Independent Wire Rope Core, Preformed.† |
| 80 Ft. | (24.4 m) | 950 Ft. | (290 m) | |
| 100 Ft. | (30.5 m) | 1150 Ft. | (350 m) | |
| 120 Ft. | (36.6 m) | 1350 Ft. | (411 m) | |
| 140 Ft. | (42.7 m) | 1550 Ft. | (472 m) | |

† Note: A wire rope of equal size, strength, flexibility and crush resistance may be substituted.

MAIN HOIST REEVING

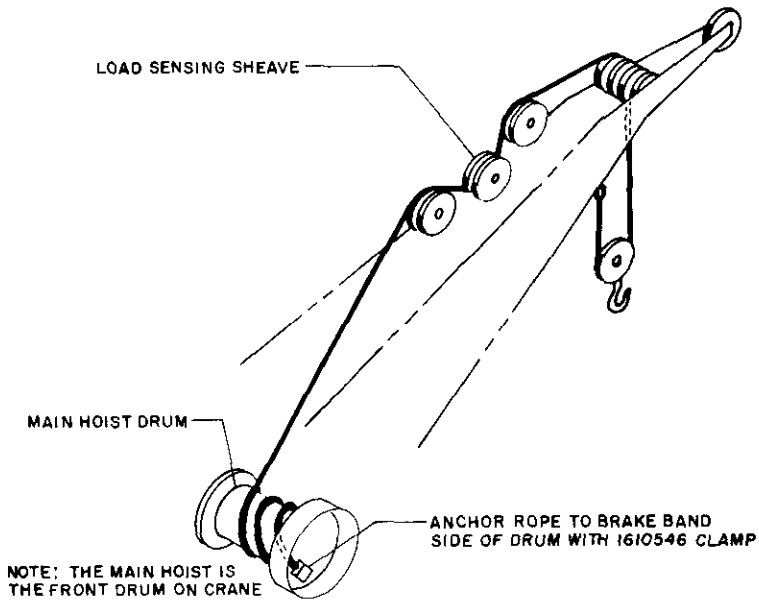


Figure 35 LT-160047

WHIP HOIST REEVING

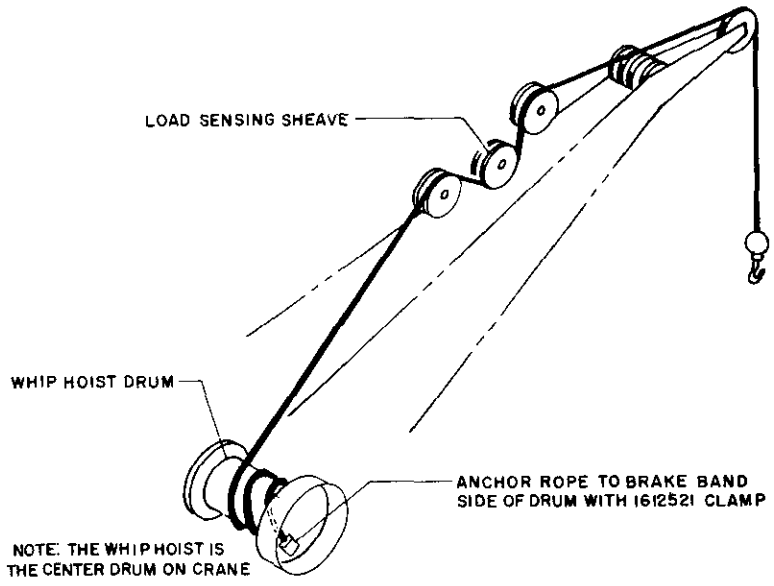


Figure 36 LT-160047

BOOM HOIST REEVING

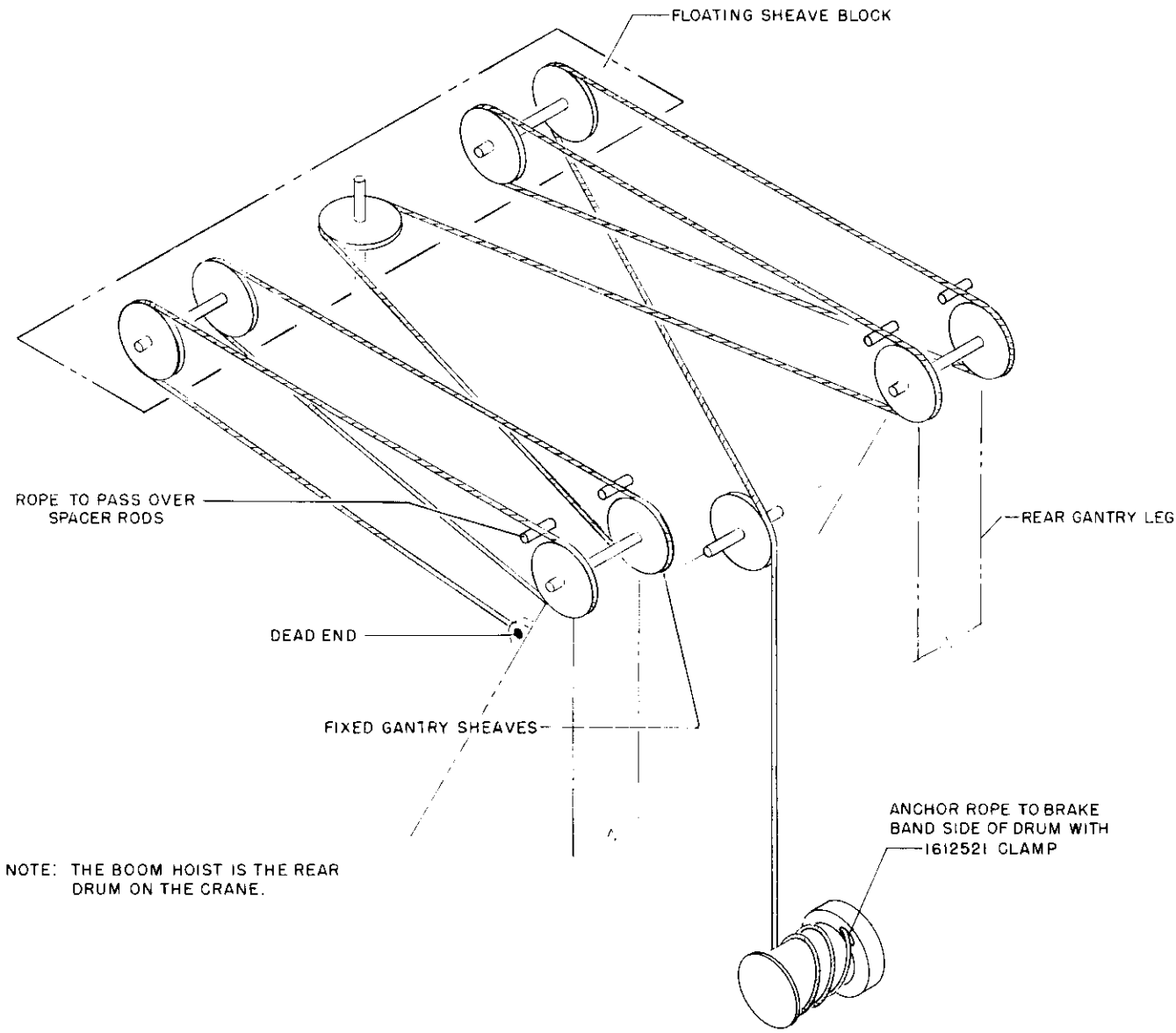


Figure 37

LT-160032

## BOOM HOIST BLOCK SUPPORTS

Block supports (Fig. 38) are installed on the boom in order to retard any bouncing motion of the floating sheave block, and to ease wire rope replacement.

Different boom lengths require that different block supports be used between the boom and floating block. The chart below specifies the required block support part number for certain boom lengths.

BOOM HOIST BLOCK SUPPORT

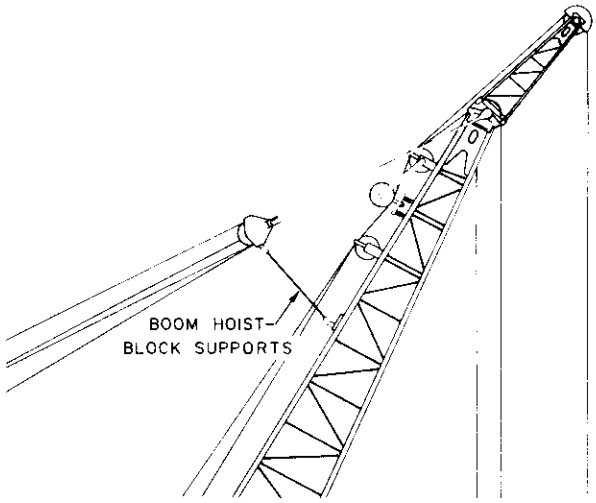


| Boom Length | Block Support Length |
|---|---|
| 80′ | 42 Inches (1.07 m) |
| 100′ | 20 Inches ( .51 m) |
| 120′ | 9.75 Inches ( .25 m) |

Figure 38

LT-160031

## WIRE ROPE MAINTENANCE AND INSPECTION

### LUBRICATION

During manufacture new ropes receive adequate lubrication for initial storage and the very early stages of the rope's working life. In accordance with the wire rope manufacturer's instructions, the initial lubrication must be supplemented at regular intervals.

If a well ordered plan of lubrication is not used the rope will deteriorate rapidly as follows:

Corrosion and pitting will reduce the steel area of the rope.

The wires will become brittle from excessive corrosion.

The wires of the rope move relative to each other and are subject to frictional wear. A lack of lubrication increases the rate of the frictional wear.

Pitting causes internal nicking of the wires reducing their strength.

Ropes not in regular use are subject to loss of lubrication from weathering.

Lubricating a wire rope is as vital as greasing any other piece of machinery. The wire rope manufacturer should be consulted on proper lubricants and application techniques. Good lubricants have the following characteristics:

Corrosion Resistant

Water Repellant

Penetrating Ability

Chemical Neutrality

High Pressure Flow Characteristics

Adhesiveness and Affinity for Steel

Plastic Coating

Temperature Stability

### STORAGE

Ropes should be stored in coils or on reels in a clean, dry location indoors. If lengthy storage is required, prudence dictates the rope be periodically inspected and lubricated as required. The rope must be kept clear of heat and steam and must never be allowed to rest for extended periods on concrete or ash floors.

INSPECTION

The wire rope should be inspected for the following:

Kinks or severe twists

Broken wires and nicks

Deformed, worn or flattened wires

Corroded or pitted surfaces

Shortened or lengthened rope lays

The running of a soft cloth (preferably cotton) over the entire length of wire rope will assist in locating nicks or broken wires as the nicks and breaks will pick up threads.

If any of the following conditions exists the rope should be condemned and replaced.

Six wires broken in one rope lay.

Three wires broken in one stand in one lay.

Wear of one-third the original diameter of outside individual wires.

Rope severly kinked, crushed, cut, or unstranded, or any other damage resulting in distortion of rope structure.

Considerable corrosion in the valleys between strands.

Reduction from nominal rope diameter of more than 1/16".

## READING SCHEMATICS

A schematic is a graphic representation of a fluid power or electrical system. Graphic symbols emphasize the function and methods of operation of components. Graphic symbols are capable of crossing language barriers and can promote a universal understanding of systems.

The symbols show connections, flow paths, and functions of components represented. They can indicate conditions occuring during transition from one flow path arrangement to another. Symbols do not indicate construction, nor do they indicate values, such as pressure, voltage, flow rate, and other component settings. The symbols do not indicate location of ports, direction of shifting of spools, or positions of actuators on actual components.

In this manual, the schematics are shown with the electrical power off and the engine kill valve depressed. For any given situation all connected flow lines and related components should be simultaneously considered. The symbols on the hydraulic and pneumatic schematics are basically the same and are read in essentially the same manner. The electrical schematics use a separate set of symbols. The following basic rules apply to the schematics:

Solid lines indicate flow paths.

Dash lines indicate signal or pilot pressure paths.

Squares represent valve positions

Pressure controlled valves shift due to a pressure difference.

Alternate long and short dash lines indicate component boundaries.

Circles represent miscellaneous components.

Diamonds represent fluid conditioners.

## NOTES

## TROUBLE SHOOTING — CONTROL PRESSURE CIRCUIT

Adequate control pressure (700/750 psi) is necessary for releasing all of the brakes and the boom hoist lock pawl on the crane. Control pressure is also necessary for shifting the selector valve in order to operate the main and whip hoists. See Figure 11 for the location of the control pressure pump and relief valve.

If the control pressure gage reads in a pressure range of 100 to 600 psi:

1. The control pressure relief valve is either adjusted too low or it has a small piece of dirt plugging the relief valve's poppet orifice. Gently tap the case of the relief valve several times with a small metallic object to dislodge any foreign matter that may be in the valve. Then readjust the relief valve if necessary.

2. If tapping and readjusting the relief valve does not bring the control pressure up to 700/750 psi, back out the relief valve pressure adjusting screw two turns and allow control fluid to circulate for one minute. Then readjust the screw while checking the control pressure gage. If adequate and stable control pressure cannot be obtained, replace the relief valve.

3. If steps one and two do not correct the low pressure condition, the control pressure pump is probably worn out and should be replaced.

If the control pressure gage reads zero:

1. Remove the control pressure pump and examine for damage to the shaft or drive key. Also check the drive coupling and sprocket stub shaft for damage. Replace all damaged components.

2. Check the suction line hose to the control pressure pump for a restriction or rupturing. Replace the hose if an impairment is found. Check the control pressure pump suction filter for a restriction and replace the element.

## TROUBLE SHOOTING — PUMP DRIVING HOUSING

LOW LUBE PRESSURE - The chain, sprockets, and bearings of the pump drive housing are lubricated by means of a pump mounted to the engine side of the pump drive housing. Lube oil pressure is monitored by a gage mounted to the top of the drive housing, and an indicator which alerts the operator in the cab of a low lube pressure condition. See Figure 13 for the location of the components.

If the indicator turns red while operating the crane:

1. Immediately check the lube pressure gage at the top of pump drive housing. The gage pressure should not be below 10 psi at low idle speed. If the gage reads more than 10 psi, check the hose to the indicator for a restriction or rupture and the indicator for proper operation.

2. If the gage reads between zero and 10 psi, check the pump drive lube oil level and chain spray pipe for damage. Do not overfill the case to prevent overheating and foaming of the lube oil or damage to the drive chain.

3. If the pressure is erratic, check the pump suction line for a restriction or rupture and clean the lubrication filter.

4. If the gage reads zero, remove the lube oil pump and examine for damage to the shaft or drive key. Also check the drive coupling and sprocket stud shaft for damage. Replace all damaged components.

PUMP DRIVE HOUSING IS GAINING FLUID - If the fluid level of the drive rises during crane operation, one or more of the axial piston pump shaft seals is leaking or the control pressure pump shaft seal is leaking. The hydraulic tank can be pressurized to a maximum of 5 psi (.3 bar) to locate the leaking seal once the pump drive housing inspection covers have been removed. See page 99 for procedure to replace an axial piston pump shaft seal. CAUTION: Do not remove the drive inspection covers with the engine running.

# TROUBLE SHOOTING

## TROUBLE SHOOTING — MAIN OR WHIP HOIST

| PROBLEM | POSSIBLE CAUSE | CORRECTIVE MEASURE |
|---|---|---|
| Brakes will not release and winches will not turn. | Emergency brake set valve depressed. | Pull valve to reset for normal operation. |
| | Low hydraulic fluid level. | Check tank level and add fluid if necessary. |
| | Clutch not engaged, or clutch jumps out of engaged position. | Engage clutch and check clutch adjustment. See page 63. |
| | Plugged charge pump suction line filter. | Disassemble filter, clean rod magnets and replace elements. |
| | Low or absent control pressure. Control pressure should be 700/750 psi (48.3/51.7 bar). | Check control pressure relief valve, pump and pump suction filter. See page 77. |
| | Low air pressure. | Check air supply pressure, 95 to 100 psi (6.6 to 6.9 bar) is required for normal operation. |
| | Inoperative low air pressure stop valve, P-5. | Check operation and adjustment of valve by observing pressure at valve port B. Readjust or replace as is required. See page 86. |
| | Inoperative hoist control valve, C-4. | Check discharge pressures of valve. If pressures are absent repair or replace valve. See page 85. |
| | Low Charge charge pressure brake set valve, P-7 not shifted. | If charge pressure is good [160-300 psi (11-20.7 bar)], check air supply to hoist control valve, C-4. If air supply is absent, repair or replace P-7. If charge pressure is low [140 psi (9.6 bar) or lower], see hydrostatic drive trouble shooting section. |
| Main or whip hoist winch turns regardless of position of hoist selector in operator's cab. | Hoist selector valve spool seized. | Repair or replace valve. |
| Brake will not release but winch will pressure up and hoist against brake | Brake releasing valve malfunction. | When control handle is out of neutral, pressure should be supplied to valve control piston. If pressure is present, repair or replace valve. If pressure is absent, reset emergency load release valve and check valve signal tubing for obstructions. |
| | Brake foot pedal valve leaking or misadjusted. | Check whip hoist brake cylinder pressure tap, page 44, while hoisting the whip line. Pressure should be 700/750 psi (48.3/51.7 bar). If low adjust foot pedal valve as described on page 58. |
| | Hoist brake adjusted too tight. | Adjust hoist brake. See page 57. |
| | Low control pressure. Control pressure should be 700/750 psi (48.3/51.7 bar). | Check control pressure relief valve adjustment as described on page 77. |

| PROBLEM | POSSIBLE CAUSE | CORRECTIVE MEASURE |
|---|---|---|
| Main hoist winch operates properly, but whip does not, or vice versa. | Hoist brake set too tight. | Adjust hoist brake. See page 57. |
| | Brake releasing valve malfunction. | When control handle is out of neutral, pressure should be supplied to valve control piston. If pressure is present, repair or replace valve. If pressure is absent, check valve signal tubing for obstructions. |
| | Hoist selector valve operator, P-16, not functioning properly. | Check for restriction in control pressure or drain lines to valve and remove. With air pressure to the top of the valve, the whip hoist winch should turn. With air pressure to the bottom of the valve, the main hoist winch should turn. If pressure and drain lines are clear and valve receives air signals from the hoist selector valve in the operator's cab, replace or repair the selector valve operator, P-16. |
| | Hydraulic motor malfunction. | See hydrostatic drive trouble shooting section. |
| Brakes will release, but turn winches will not turn. | Pump actuating cylinder, DC-3, disconnected from pump control lever. | Adjust and connect actuating cylinder. |
| | Hoist selector valve malfunction. The spool in the operator or the hoist selector valve is seized in the center position. | With air pressure to the top of the hoist selector valve operator, the whip hoist winch should turn. With air pressure to the bottom of the valve, the main hoist winch should turn. Repair or replace the hoist selector valve or the hoist selector valve operator. |
| | Pump or motor malfunction. | See hydrostatic drive trouble shooting section. |
| Brake will not set with control handle in neutral. | Improperly adjusted hoist control valve, C-4. | Adjust minimum discharge pressure and pick up points of valve. See page 85. |
| | Faulty brake releasing valve. | Check pressure to brake cylinder. If pressure is present with control handle in neutral, repair or replace valve. |
| | Brake set too loose. | Adjust brake. See page 57. |
| | Worn or oily brake linings. | Inspect and replace as necessary. |
| Neutral difficult to find. Pump groans with possible pressure indications of hoist gage when control handle is in neutral. | Pump actuating cylinder out of adjustment | Disconnect cylinder from pump control lever. If pump returns to neutral, adjust cylinder linkage and replace. If pump does not return to neutral, see hydrostatic drive trouble shooting section; displacement control valve. |
| Hoist will not lift allowable loads. | Insufficient parts of wire rope reeving. | Check reeving chart in cab to determine correct number of lines necessary to hoist load. Add parts of line if required. |
| | Pump or motor malfunction. | See hydrostatic drive trouble shooting section. |
| Brake releases late and load drops slightly when control handle is moved in lower direction. | Low control pressure. Pressure should be 700/750 psi (48.3/51.7 bar). | Adjust control pressure as described on page 41. |
| | Improperly adjusted hoist control valve, C-4. | Adjust minimum discharge pressure and pick up points of valve. See page 85. |
| | Pump actuating cylinder D-3, improperly adjusted. | Adjust cylinder to be sure it does not push or pull on pump control lever when control handle is in neutral. |

| PROBLEM | POSSIBLE CAUSE | CORRECTIVE MEASURE |
|---|---|---|
| Winch will power down but will not hoist. | Main and/or whip hoist line travel limiter is actuated. | Lower main and/or whip hoist until hoist line follower is hanging from line travel limiter valve box arm. |
| | Valve P-4 is shifted causing valve P-3 to be shifted. | Check for air signal to diaphragm of P-4. If a signal is present, adjust actuating cams for valves V-5 and V-6 and check operation of V-5 and V-6. If no signal is present check for signal to cylinder of valve P-3. If P-3 has a signal, repair or replace P-4. If no signal is present at P-3, repair or replace P-3. |
| | Faulty hoist control valve, C-4. | Check both discharge pressures of valve. If either pressure is absent, repair or replace valve. Minimum and maximum should vary by 65 psi (4.5 bar). See page 85. |
| Winch will turn in hoist direction, but will not turn in power down direction. | Shuttle valve in main or whip motor valve manifold is shifted and held. | See hydrostatic drive trouble shooting section. |
| | Brake set too tight. | Adjust brake. See page 57. |
| | Faulty hoist control valve, C-4. | Check both discharge pressures of valve. If either pressure is absent, repair or replace valve. Minimum and maximum should vary by 65 psi (4.5 bar) |
| | Pump and/or motor malfunction. | See hydrostatic drive trouble shooting section. |
| Operation of hoist is extremely sluggish when hoist handle is moved out of neutral. Hook continues rising several feet and brakes squeal when handle is returned to neutral. | Orifice mistakenly installed under pump displacement control valve. | Lift displacement control valve from atop main/whip pump and remove orifice from inner most "O" ring port. |
| Main or whip hoist motor fails to change speeds. | Blocked or severed air line to hoist high speed valves, P-14 or P-15. | Repair air line. |
| | Faulty hoist high speed valve, P-14 or P-15. | Replace faulty valve. |
| | Charge pressure supply tubing to hoist high speed valve not installed when motor changed out. | Install tubing and fittings as shown in the illustrated parts list. |
| Main or whip hoist shaft assembly (drum) gaining fluid. | Leaking main or whip hoist motor shaft seal. | Replace motor shaft seal. See hydrostatic drive trouble shooting section. |

## TROUBLE SHOOTING — BOOM HOIST

| PROBLEM | POSSIBLE CAUSE | CORRECTIVE MEASURE |
|---|---|---|
| Brake and lock pawl will not release and winch will not turn. | Closed charge pump suction line valve. | Open valve and install stem locking device. |
| | Emergency brake set valve depressed. | Pull valve to reset for normal operation. |
| | Low hydraulic fluid level. | Check hydraulic tank level and add fluid if necessary. |
| | Clutch not engaged, or clutch jumps out of engaged position. | Engage clutch and check clutch adjustment. See Page 63. |
| | Plugged suction line filter. | Disassemble filter, clean rod magnets and replace elements. |
| | Inoperative boom hoist control valve, C-2. | Check discharge pressures of valve. If pressures are absent repair or replace valve. See page 85. |
| | Low charge pressure brake set valve, P-8, not shifted. | If charge pressure is good [160-300 psi(11-20.7 bar)], check air supply to boom hoist control valve C-2. If air supply is absent, repair or replace P-8. If charge pressure is low [140 psi (or 9.6 bar) or lower], see hydrostatic drive trouble shooting section. |
| Winch turns, brake and lock pawl release when powering down but not when hoisting or vice versa. | Upper (lower) boom angle limiter system actuated. | Lower (raise) boom until system is disengaged. Adjust cams as may be required. See page 65. |
| | One of boom angle limiter valves, V-13, V-14, P-1 or P-2, is shifted. | Check operation of all four valves. Under normal conditions V-13 and V-14 should not send pressure to P-1 or P-2 and P-1 and P-2 should permit free air flow. Replace or repair any faulty valves. |
| | Faulty boom hoist control valve, C-2. | Check both discharge pressures of valve. If either pressure is absent, repair or replace valve. Minimum and maximum should vary by 65 psi (4.5 bar). See page 85. |
| | Low or absent control pressure. Control pressure should be 700/750 psi (48.3/51.7 bar). | Check control pressure releif valve, pump and pump suction filter. See pages 41 and 77. |
| Brake and lock pawl will not release but winch will pressure-up and hoist against brake. | Faulty boom brake/lock pawl releasing valve, P-13. | Repair or replace valve. |
| Lock pawl remains release when boom brake is set. | Faulty or improperly adjusted lock pawl cylinder flow control valve. | Replace or adjust valve. See page 42. |
| | Lock pawl return spring disconnected. | Install spring. |
| Boom brake and lock pawl remain released when control handle is in neutral | Improperly adjusted boom hoist control valve, C-2. | Adjust minimum discharge pressure and pick up points points of valve. See page 85. |
| | Faulty boom brake releasing valve, P-13. | Repair or replace valve. |

| PROBLEM | POSSIBLE CAUSES | CORRECTIVE MEASURE |
|---|---|---|
| Boom brake remains engaged but lock pawl releases. | Boom brake adjusted too tight. | Adjust boom brake. See page 57. |
| Brake and lock pawl will release but winch will not hoist or power down. | Pump actuating cylinder, DC-2, disconnected from pump control lever. | Adjust and connect actuating cylinder. |
| | Pump and/or motor malfunction. | See hydrostatic drive table shooting section. |
| Neutral difficult to find. Pump groans with possible pressure indications on boom gage when control handle is in neutral. Brake and lock pawl are set | Pump actuating cylinder, DC-2, out of adjustment. | Disconnect cylinder from pump control lever. If pump returns to neutral, adjust and connect cylinder to control lever. If pump does not return to neutral, see hydrostatic drive trouble shooting section. |
| | Pump displacement control valve out of adjustment. | See hydrostatic drive trouble shooting section. |
| Boom operation slow. | Air pressure regulator out of adjustment. Control air pressure should be 95/100 psi (6.6/6.9 bar). | Adjust air pressure regulator. If so equipped, check adjustment of air compressor unloading valve. |
| Boom hoist, shaft assembly (drum) gaining fluid. | Leaking boom hoist motor shaft seal. | Replace motor shaft seal. Se hydrostatic drive trouble shooting section. |

## TROUBLE SHOOTING — SWING

| PROBLEM | POSSIBLE CAUSES | CORRECTIVE MEASURE |
|---|---|---|
| *Crane will not swing* allowable loads | *Closed charge pump* suction line valve. | *Open valve and install stem locking device.* |
| | Swing brake valve depressed. | Pull valve to release brake and provide air to swing control valve, C-1. |
| | Low hydraulic fluid level. | Check tank fluid level and add fluid if necessary. |
| | Clutch not engaged, or clutch jumps out of engaged position. | Engage clutch and check clutch adjustments. See page 63. |
| | Plugged suction line filter. | Disassembly filter, clean rod magnets and replace elements. |
| | *Pump and/or motor* malfunction. | *See hydrostatic drive trouble shooting section.* |
| Swing brake releases but crane will not pressure-up and swing allowable loads. | Low hydraulic fluid level. | Check tank fluid level and add fluid if necessary. |
| | Pump actuating cylinder DC-1, disconnected from *pump control lever.* | Properly connect cylinder to pump control lever. |
| | Plugged suction line filter. | Disassemble filter, clean rod magnets and replace elements. |
| | Swing gage shuttle valve on motor faulty. | Disconnect shuttle valve at bottom of swing motor. Disassembly valve, clean and inspect. Replace if ball or *body shows signs of heavy wear.* |
| | Pump and/or motor malfunction. | See hydrostatic drive trouble shooting section. |
| Swing brake will not release but swing drive *will pressure-up* and turn against brake. | Low or absent control pressure. Control pressure should be 700/750 psi (48.3/51.7 bar). | Check control pressure relief valve, pump and pump suction filter. See pages 41 and 77. |
| | Swing brake set too tight. | Adjust brake as described on page 58. |
| | Faulty swing brake releasing valve. | Repair or replace valve. |
| Neutral difficult to find. Pump groans with brake set or swings inadvertently with brake released. | Pump actuating cylinder DC-3, out of adjustment. | Disconnect cylinder from pump control lever. If pump returns to neutral, adjust cylinder linkage and replace. If pump does not return to neutral, see hydrostatic drive trouble shooting section. |
| Crane swings in one direction only. | Faulty swing control valve, C-1. | Check both valve discharge pressures. Minimum and maximum should vary by 65 psi (4.5 bar). If either pressure is low, repair or replace valve. See page 85. If pressures are good, see hydraulic drive trouble shooting section. |
| | Pump malfunction | See hydraulic drive trouble shooting section. |
| Swing is jerky with abnormally high pressures on swing gage. | Swing brake is dragging. | Adjust swing brake and verify pads do not drag on disk. See page 58. |
| Swing brake will not properly set. | Brake adjusted too loose. | Adjust brake. See page 58. |
| | Worn or oil contaminated pads on brake. | Replace brake pads. |
| | Broken brake springs. | Replace broken springs. |
| Swing gear reducer is gaining fluid. | Leaking motor shaft seal. | Replace motor shaft seal. See Hydrostatic Drive Trouble Shooting Section. |

## AIR VALVE REPAIR, MAINTENANCE AND OPERATION

HOIST AND SWING CONTROL VALVE (Figures 40, 41 and 42)

OPERATION - With the handle in the "OFF" or neutral position, both control pressure ports, 1 and 3, are open to the atmosphere through their respective pilot valves in the control valve.

The handle operates a dual cam. The peripheral surface of the larger section is contoured to provide minute positioning increments to the pressure control portion. The smaller section moves the right and left hand levers to operate the pilot valves.

Movement of the handle in the first 10° of the 46° travel arc closes the exhaust of the pressure control portion (no preload setting) and one of the pilot valves. The other pilot valve is operated when the handle is moved in the opposite direction. Handle movement to or beyond the 10° position unseats the inlet valve in the control portion of the pilot valve. Controlled pressure from the unseated inlet valve of the pressure control portion flows through an internal passage to the inlet valve seats of the pilot valves. Depending upon the quadrant in which the handle is positioned, the controlled pressure will flow through the opened pilot valve to the "OUT" port, 1 or 3. The pressure at the "OUT" port is proportional to the handle position in the handle travel arc.

The control valve will automatically compensate for downstream air pressure changes. If the air pressure at the "OUT" port increases over that called for by the handle position, the diaphragm in the control portion will deflect downward. This moves the exhaust valve seat away from the inlet and exhaust valve unit and vents the excess pressure. If the pressure drops below that called for by the handle position, the control spring will force the diaphragm upward. The exhaust valve seat then moves the inlet valve of the inlet and exhaust valve unit from its seat to open the "IN" port to the "OUT" port and restore the pressure called for.

MAINTENANCE - Maintenance periods should be scheduled in accordance with frequency of use and working environment of the control valve. A repair kit containing seals and other expendable parts is listed in the OS-435 parts list.

Notice the operating portion of the valve can be removed without disturbing the tubing connections. Remove the valve from the pipe bracket by loosening studs (1) and lift the unit free.

Completely disassemble the control valve. Wash all metal parts in a nonflammable solvent and all rubber parts with soap and water. Rinse each part thoroughly and blow dry with a low pressure air jet. Arrange the parts on a clean white surface in the order of the exploded view.

Examine each part carefully. All parts of the repair kit should be used when rebuilding the valve. As reassembly proceeds, lubricate each part. Use no. 107 Lubriplate on metal-to-metal surfaces and Cosmolube on all rubber parts. Equivalent greases to those recommended can be used.

PILOT VALVE LEVER ADJUSTMENT - Use the adjustment set-up shown in Figure 40 and an inlet pressure of 90 psi (6.21 bar). Turn the adjustment screw (24) clockwise until the control spring (27) is slightly compressed. Remove the valve protectors (47). Move the control valve handle (7) back and forth on both sides of the "OFF" position, observing the action of levers 41 and 45. The pilot valves should be fully open after the handle moves through the first 10° of the travel arc. If the pilot valve levers need adjusting, place the handle in a maximum increasing pressure position. With a 3/32" hex key wrench, turn the adjusting screw (44) of the activated lever (either 41 or 45) counterclockwise, just far enough to crack the exhaust valve. The gage will show a drop in pressure. From this point, turn the adjusting screw clockwise a full three (3) turns. This will open the inlet valve of the pilot valve to its maximum capacity.

Move the handle to the opposite extreme position and repeat the adjustment for the other pilot valve lever.

CAM DOG ADJUSTMENT - The eccentric cam dog pin (38) aligns the cam dog (39) with the rise on cam 15. If pressure response is not identical to handle position in both directions, compensate this difference by turning the cam dog pin (38) either clockwise or counterclockwise.

PRESSURE SETTING ADJUSTMENT - Use adjustment set-up shown in Figure 40 and an inlet pressure of 90 psi (6.21 bar). Adjusting screw 24 varies the minimum and maximum pressure setting a like amount without changing the pressure range. Turning the adjusting screw in raises the maximum and minimum pressures. The minimum pressure should be about 13 psi (.9 bar) and the maximum pressur should be about 80 psi (5.52 bar). If the minimum pressure is set too high, rough operation will result. If the minimum pressure is too low, the hoist speeds or swing speed will be below the maximum possible.

NOTE: The maximum pressure is the pressure with valve control handle moved 46° and the minimum pressure is the pressure with the valve control handle moved 10° from the neutral or "OFF" position. The discharge pressures with the control handle in the neutral or "OFF" position should be 0 psi.

DIAPHRAGM OPERATED VALVES

OPERATION - The diaphragm operated valves are a normally closed valve and require approximately 5 psi (.3 bar) to the diaphragm to open the valve.

REPAIRS - A repair kit for the diaphragm operated valves is listed in the parts list. Instructions for the valve repairs are included with the kit.

CYLINDER OPERATED VALVES (Single Acting)

OPERATION - The single acting cylinder operated valves can be normally open or normally closed valves. The valves require approximately 35 psi (2.4 bar) to the piston to shift the valve. The valves are spring returned.

REPAIR - Replacement seals for the valve spools and cylinder pistons are listed in the parts list. The valves are simple in design but should be carefully disassembled, cleaned, lubricated and properly reassembled.

CYLINDER OPERATED VALVES (Double Acting)

OPERATION - The two double acting cylinder operated valves are normally closed valves. The valves require approximately 125 psi (8.6 bar) hydraulic pressure to be shifted with 90 psi (6.21 bar) pressure on the opposite side of the piston. In case of loss of air pressure the valves are spring returned.

REPAIR - Replacement seals for the valve spools and cylinder pistons are listed in the parts list. The valves are simple in design but should be carefully disassembled, cleaned, lubricated and properly reassembled.

LOW AIR PRESSURE SAFETY VALVES (Figure 39)

OPERATION - The low air pressure safety valves are adjustable pressure holding valves that do not yield until the air supply pressure exceeds the setting. After opening, the valve permits free air flow. When the air supply pressure drops below the opening pressure setting of the valve, the valve closes and exhausts the air pressure in the "downstream" position of the control system.

PRESSURE SETTING ADJUSTMENT - The pressure setting of the valves is adjusted by loosening the jam nut and turn the adjustment screw "IN" to increase the setting and "OUT" to decrease the setting. The pressure setting range of the valves is 0 to 75 psi (0 to 5.2 bar).

NOTE: The decreasing air pressure warning valve (P-6) should be set to yield at 75 psi (5.2 bar). The low air pressure main/whip stop valve (P-5) should be set to yield at 50 psi (3.4).

REPAIR - Should the valves fail to function properly they should be replaced.

MISCELLANEOUS VALVES

REPAIR - Replacement seals, repair kits and replacement knobs are listed in the parts list. The repair kits include instruction for rebuilding the valves. Care should always be exercised that the valves are properly reassembled.

LOW AIR PRESSURE SAFETY VALVES

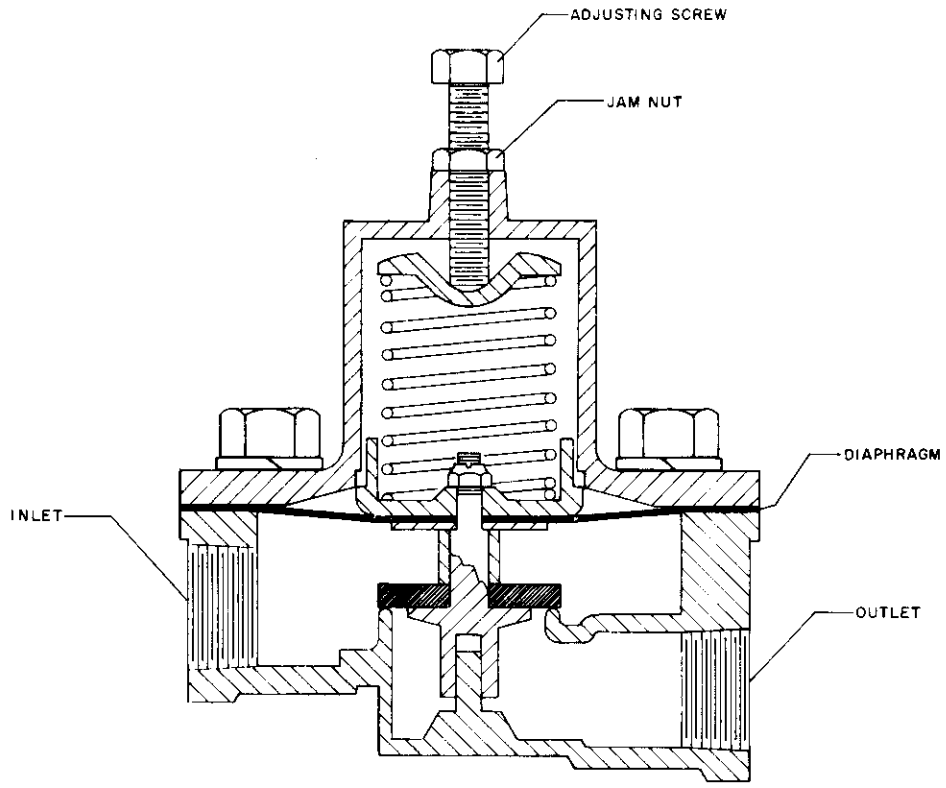


Figure 39

LT-160036

CONTROL VALVE ADJUSTMENT SET-UP

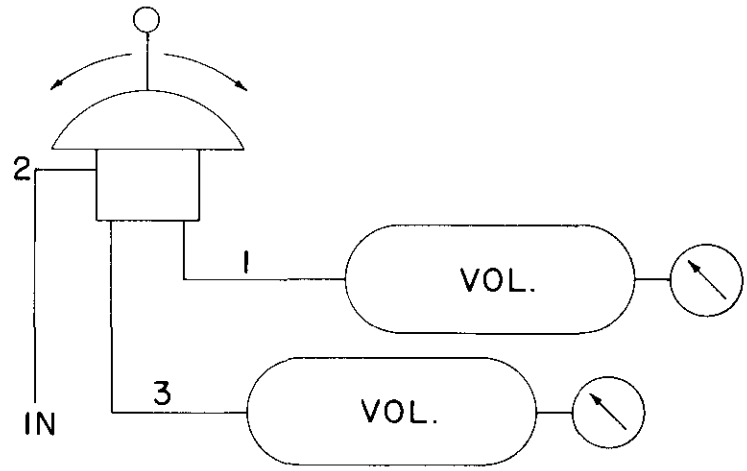


Figure 40 LT-160033

CONTROL VALVE OPERATION

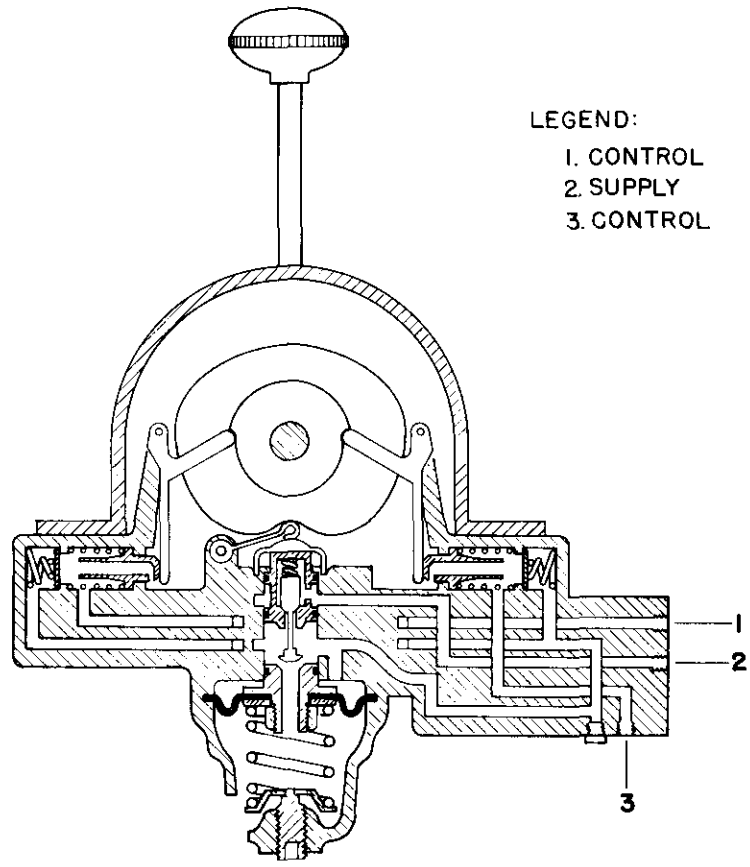


Figure 41 LT-160034

CONTROL VALVE PARTS

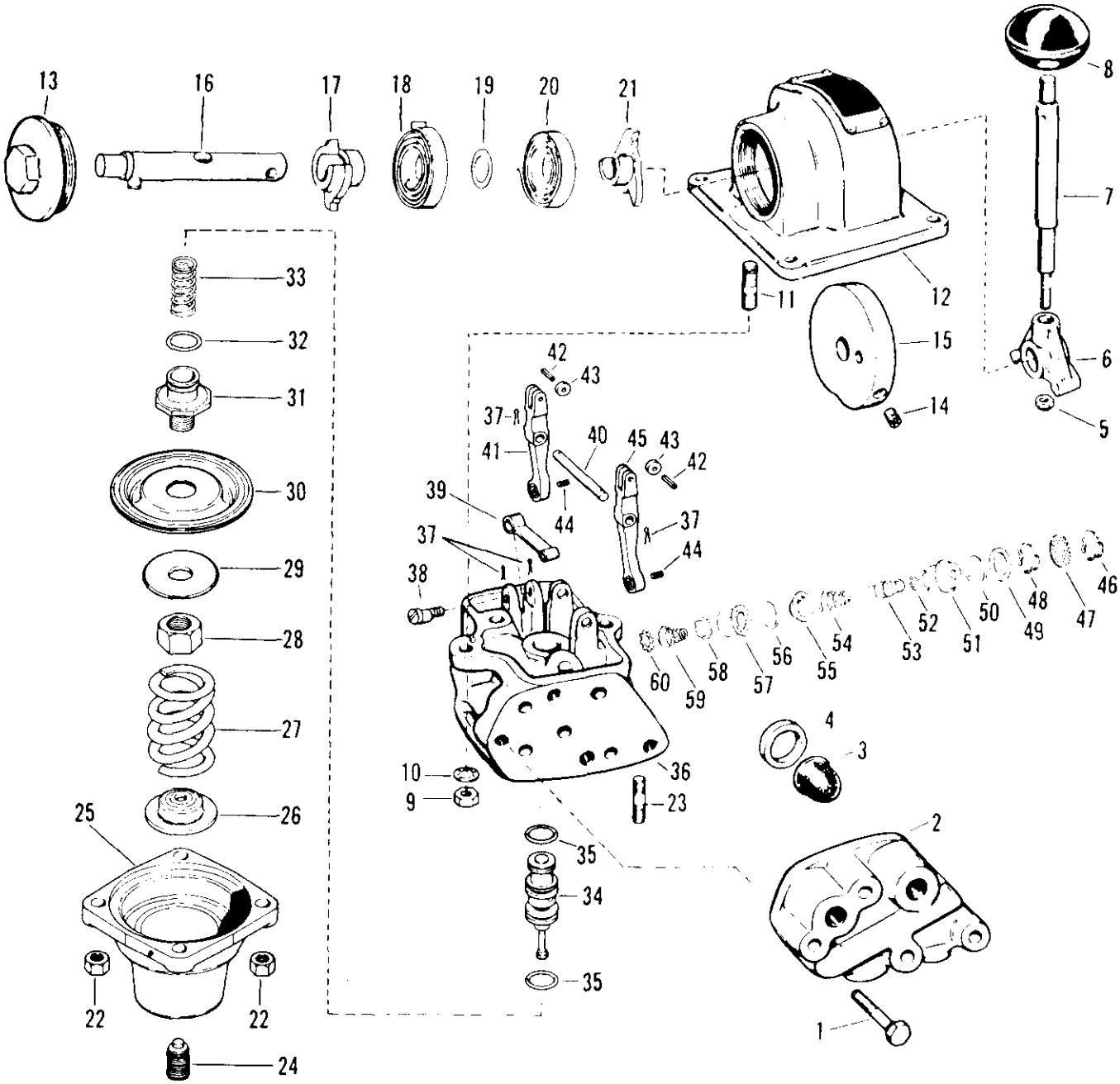


Figure 42

LT-160035

## HOIST AND SWING CONTROL VALVE PART DESCRIPTIONS

| Item No. | Description | Item No. | Description |
|---|---|---|---|
| 1. | SCREW, 5/16" X ½-1/8" Cap | 31. | SEAT, Exhaust Valve |
| 2. | PIPE BRACKET | 32. | O-RING |
| 3. | STRAINER, Port | 33. | SPRING, Exhaust Valve |
| 4. | GASKET, Port | 34. | INLET and EXHAUST VALVE UNIT |
| 5. | NUT, ¼" - 28 | 35. | O-RING |
| 6. | YOKE, Handle | 36. | BODY |
| 7. | SHAFT, Handle | 37. | PIN, Cotter |
| 8. | BALL, Handle | 38. | PIN, Cam Dog |
| 9. | NUT, 5/16" - 18 | 39. | DOG, Cam |
| 10. | WASHER, Lock | 40. | PIN, Lever |
| 11. | STUD, 5/16" - 18 X 1-1/8" | 41. | LEVER, Right Valve |
| 12. | HOUSING, Cam | 42. | PIN, Roll |
| 13. | NUT, Cap | 43. | ROLLER |
| 14. | SCREW, Set | 44. | SCREW, Set |
| 15. | CAM | 45. | LEVER, Left Valve |
| 16. | SHAFT, Cam | 46. | RING, Retaining |
| 17. | ARBOR, Spring | 47. | PROTECTOR, Valve |
| 18. | SPRING, Handle | 48. | RING, Retaining |
| 19. | WASHER | 49. | WASHER |
| 20. | SPRING, Handle | 50. | O-RING |
| 21. | ARBOR, Spring | 51. | GUIDE, Plunger |
| 22. | NUT, 5/16" - 18 | 52. | O-RING |
| 23. | STUD, 5/16" - 18 X 1-5/16" | 53. | PLUNGER |
| 24. | SCREW, Spline Adjusting | 54. | SPRING, Exhaust Valve |
| 25. | HOUSING, Spring | 55. | SEAT, Inlet Valve |
| 26. | SEAT, Spring | 56. | O-RING |
| 27. | SPRING, Control | 57. | SPACER, Valve |
| 28. | NUT, 9/16" - 18 | 58. | VALVE, Inlet |
| 29. | FOLLOWER, Diaphragm | 59. | SPRING, Inlet Valve |
| 30. | DIAPHRAGM | 60. | RING, Retaining |

## HYDROSTATIC DRIVE TROUBLE SHOOTING

The following instructions and fault-logic diagrams should provide a comprehensive guide to trouble shooting the hydrostatic drives of the OS-435 crane.

A fault-logic diagram is provided for each of the five problems which experience has shown to cover the majority of problems encountered with hydrostatic drives. The applicable diagram should first be found and then followed to trouble shoot the hydraulic transmission. The paragraphs below give specific instructions covering steps in the fault-logic diagrams.

### DISPLACEMENT CONTROL VALVE INSPECTION

Disconnect the pump actuating cylinder and remove the mounting bracket and cylinder from the pump. Remove the valve mounting cap screws and lift the valve away from the pump. A gasket and three O-Rings are used beneath the valve and the swing pump has an orifice inside the inner most O-Ring. Care must be exercised to be certain no parts are dropped into the pump case.

The valve linkage (connection to swashplate), pins and retaining rings should all be closely examined. Confirm the torsional spring is not broken and the orifice (when used) is not plugged. Inspect the O-Rings for damage.

The valve is removed form the pump by removing the pin connecting the valve linkage to the swashplate angle feedback link. Upon replacement of the valve, new O-rings and a new gasket of the proper thickness should be used. The valve must be carefully lowered to insure proper location of the O-Rings, gasket and orifice.

DISPLACEMENT CONTROL VALVE MOUNTING

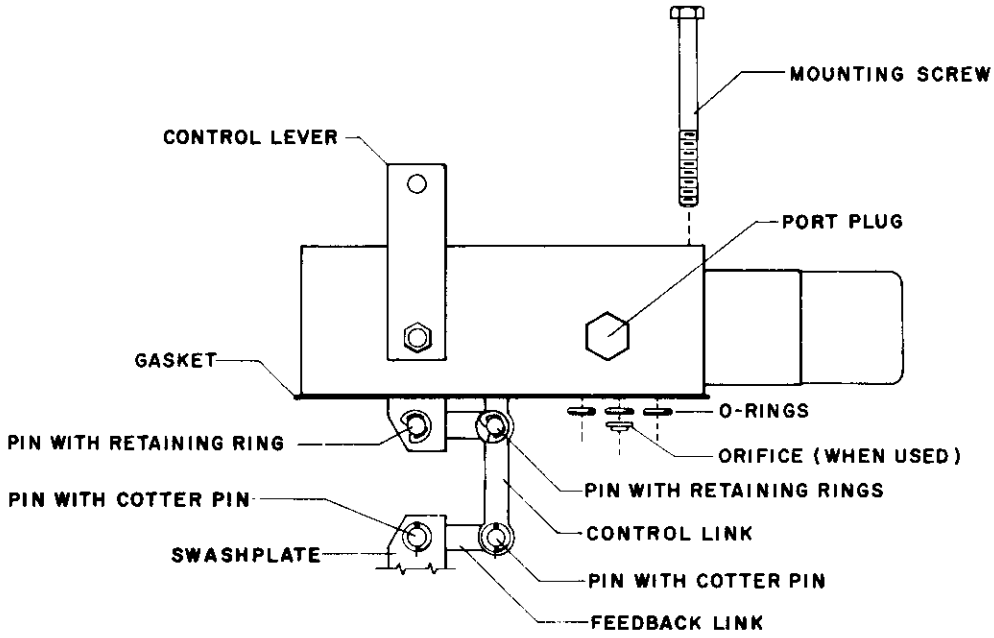


Figure 43

LT-160037

DISPLACEMENT CONTROL VALVE ADJUSTMENT

WARNING: The variable pump control valve assembly is adjusted at the factory. At no time should the control valve be readjusted in the field. If the adjustment screws have been tampered with, use the following procedure to make the correct control valve adjustment. Refer to Figure 44.

1. Remove the control valve assembly from the pump prior to making the adjustments. See "Displacement Control Valve Inspection".

2. Remove the end plug from the centering spring mechanism. With locknut (Item 1) loose and holding the centering spring housing (Item 3), turn the spring adjusting screw (Item 2) until the screw is just touching the centering spring washer; thus taking the free end play out of the centering spring mechanism. This is best done by exerting a light back and forth force on the control valve spool (Item 6) at the same time the adjusting screw is being turned down. Care must be taken not to compress the centering spring (Item 4) beyond its installed height. Tighten the locknut (Item 1) and recheck the spool (Item 6) for end play.

3. Adjust the control valve spool (Item 6) for the neutral position. Remove the 7/16"-20 boss seal plugs (Item 5) on either side of the control valve housing (Item 7) in the control valve spool bore location of the casting to reveal the servo cylinder porting holes (Item 8). Loosen the locknut (Item 9) and adjust the control valve spool by screwing the centering spring housing (Item 3) in or out so that the open areas (Reference A) between the spool lands and sides of th porting holes are equal. Tighten the locknut (Item 9), recheck the open areas, and reinstall the two 7/16"-20 boss seal plugs.

4. Re-install control valve on pump. Care should be exercised not to damage the O-Rings under the valve and to properly position the orifice (If used). Carefully check the operation of the pump after the control valve adjustment.

DISPLACEMENT CONTROL VALVE ADJUSTMENT

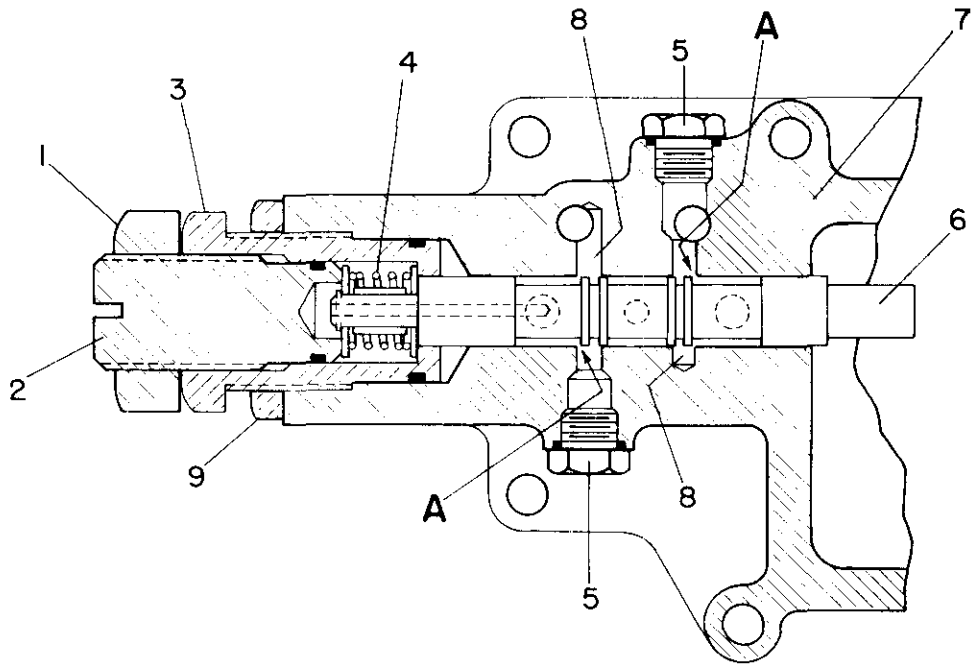


Figure 44

LT-160038

STYSTEM RELIEF VALVE INSPECTION (Figure 48)

Using a new or borrowed relief valve of the same setting, replace the system relief valves one at a time, checking the system operation after each replacement. If the problem ceases, discard the faulty relief valve.

Inspect the valves for the proper setting. The first two digits of the setting are stamped on the end of the valve. For instance 45 for 4500 psi (310.3 bar), 60 for 6000 psi (413.8 bars), and 15 for 1500 psi (103.4). Both of the swing motor relief valves are stamped 45. The main and whip hoist motors have a 5000 psi relief valve on the left side and a 1500 psi relief valve on the right side, when viewed from the valve manifold block end. The boom hoist motor has a 6000 psi relief valve on the left side and a 1500 psi relief valve on the right side, when viewed from the valve manifold block end.

RELIEF VALVE OPERATION

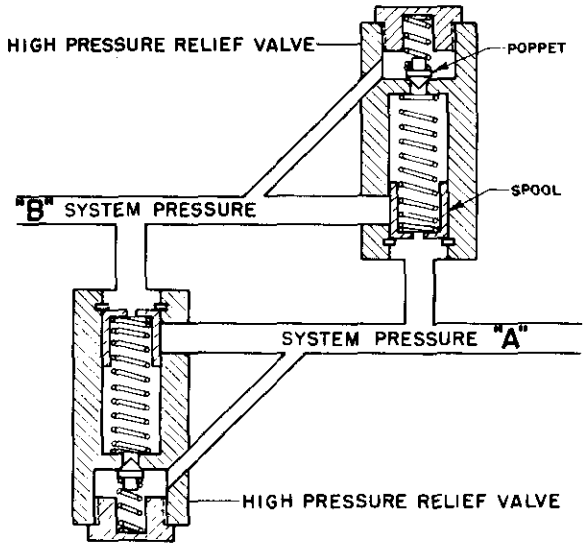


Figure 45 LT-160039

SHUTTLE VALVE INSPECTION (Figure 48)

The valve spool must move smoothly in the bore. Inspect for worn, galled or broken parts. The spool and valve manifold block are matched and are not interchangeable.

The swing motor shuttle valve spool has a spring and washer on each end. The hoist motor shuttle valves are blocked to shift only when the system has high pressure at motor port "A". For this reason the hoist motor shuttle valve spools, when viewed from the valve manifold block end, have a spring and washer on the left-hand end and a spool extension or spacer on the right-hand end.

CHARGE PRESSURE CHECK VALVE INSPECTION (Figure 46)

CHARGE PRESSURE CHECK VALVE

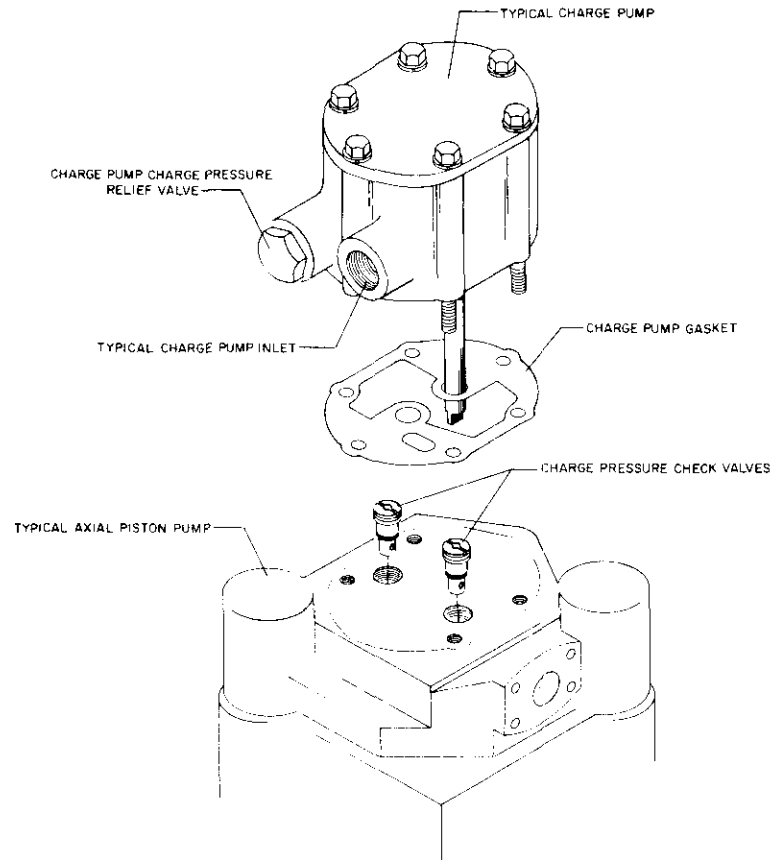


Figure 46 LT-160040

Carefully remove the charge pump to expose the cartridge check valves. Inspect the valves for spring load, proper seating, damaged O-rings and foreign material. When the problem is in one direction only, interchange the check valves to see if the problem changes sides. A new gasket should be used when the charge pump is replaced on the axial piston pump.

CHARGE PRESSURE RELIEF VALVE INSPECTION (Figures 47 and 48)

Inspect for foreign material holding the poppet open, galling or wear on the poppet and seat, a broken spring or an improper setting.

## CHARGE PUMP

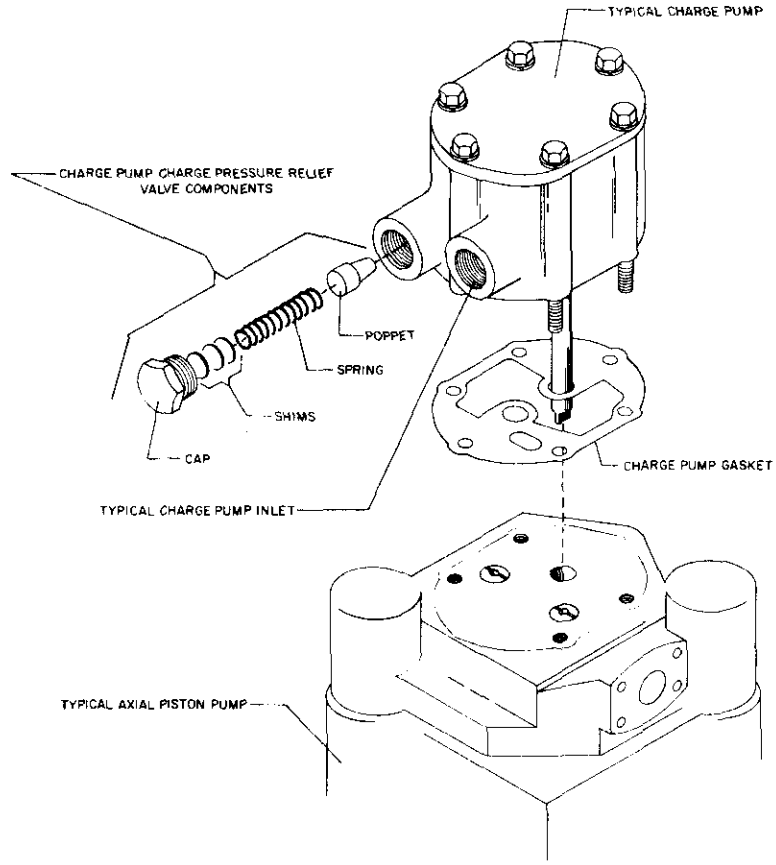


Figure 47

LT-160041

MOTOR VALVE MANIFOLD ASSEMBLY

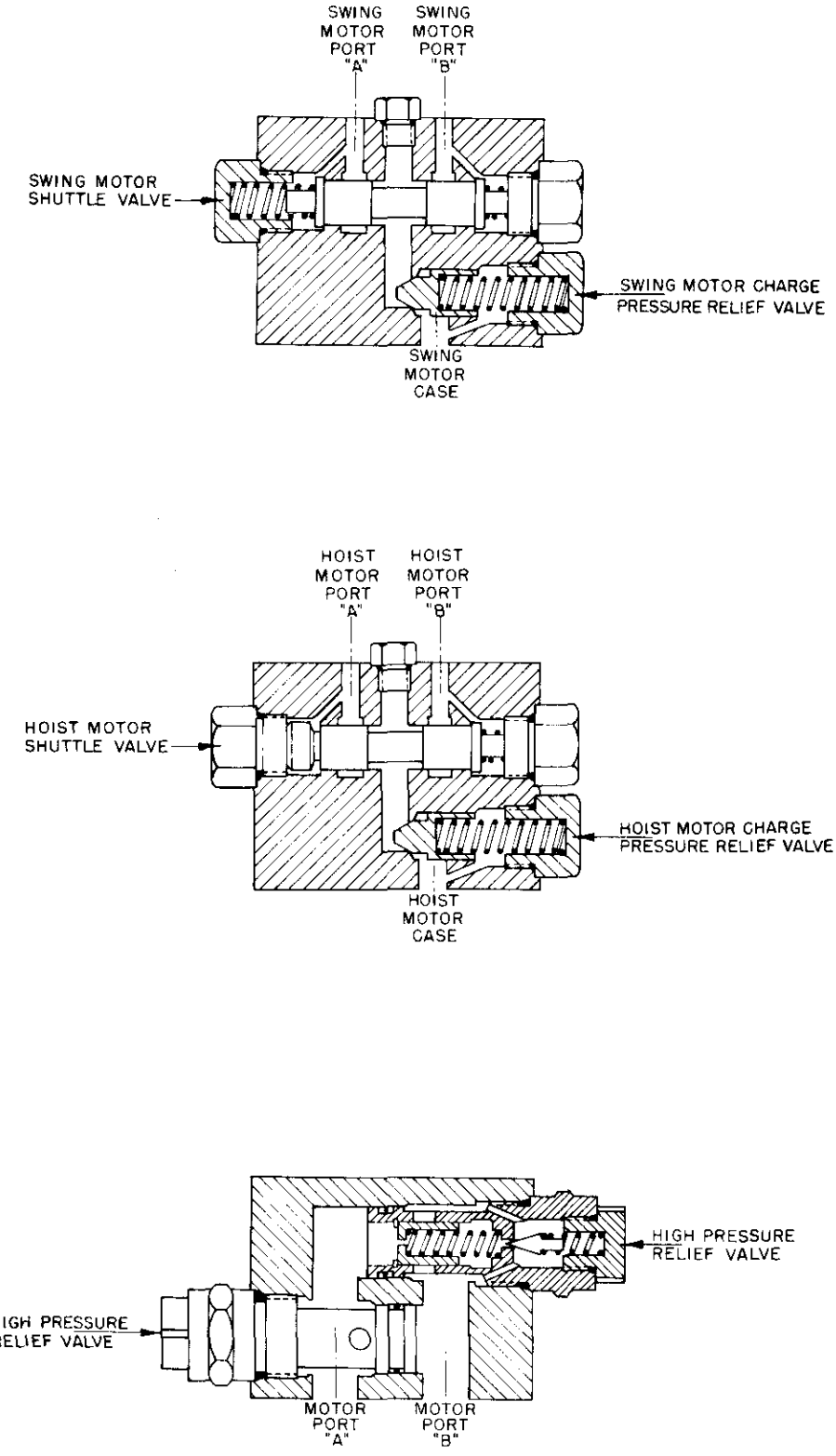


Figure 48

LT160015

CHARGE PUMP INSPECTION (Figures 46 and 47)

Carefully remove the charge pump. The shaft and internal gears must turn smoothly. Futher disassembly of the charge pump is not recommended. Check the condition of the pump drive clevis and tang.

CHECKING CHARGE PRESSURE

The proper gages for checking charge pressure are provided in the operator's cab on the right-hand rear panel. In neutral charge pressure should be 190 to 300 psi (13.1 to 20.7 bar). While powering down charge pressure should be 180 to 290 psi (17.4 to 20 bar). While hoisting or lowering a load, charge pressure should be 160 to 280 psi (9.3/19.3 bar). NOTE: PRESSURES SLIGHTLY ABOVE THOSE NOTED ARE NOT UNCOMMON. THE PRESSURE, HOWEVER, SHOULD NOT EXCEED 400 PSI. (27.6 BAR).

The charge pressure system has two relief valves, one in the charge pump and one at the motor. The charge pressure relief valve at the motor has a lower pressure setting to provide for system cooling. In neutral and while powering down, the charge pressure relief valve at the pump is used. While hoisting or lowering a load, or swinging the crane, the charge pressure relief valve at the motor is in use.

INTERPRETING CHARGE PRESSURE

NO CHARGE PRESSURE - If there is no charge pressure at any position of the control lever, the charge pump is probably at fault. Most likely the drive shaft has been broken. To confirm the diagnosis, remove the charge pump and examine for broken parts.

Complete lack of charge pressure could also be due to spring breakage, damage, or dirt in the charge pressure relief valve located in the charge pump. Examine the relief valve for dirt, wear, and possible sticking.

FLUCTUATING PRESSURE - If the charge pressure is erratic with control lever in neutral and in the side position, with pressure level perhaps a little lower than expected, this may indicate cavitation of the charge pump from low fluid level in the reservoir, collapsed suction hose, or dirty suction filter elements. Check for these conditions and replace the suction line filter elements.

CHARGE PRESSURE DROPS WHEN CONTROL LEVER IS SHIFTED - If the charge pressure holds steady when the control lever is in neutral, with about the right expected pressure, then falls rapidly as the control lever is moved to a side position, this usually indicates that the charge fluid is escaping into the case through clearances which open up as the control lever tries to cam the pump. The most likely fault is a scored valve plate. When the valve plate becomes scored fluid pressure can get under it and tends to lift it from intimate contact with the bearing plate. This allows some of the high pressure loop fluid and some of the charge pump fluid to escape into the pump or motor case. With this condition the charge pressure may fall very low, too low to cam the pump swashplate to more than a small angle. If charge pressure falls below 140 psi (9.7 bar), replacement of the damaged pump and motor is necessary.

If charge pressure drops only when trying to power down an empty hook or boom or drops only when swinging one direction, the shuttle valve in the motor valve manifold is probably shifted and held. A similar condition, however, will exist if an O-ring underneath the displacement control valve is damaged and leaking. (See Figures 43 and 48).

NOTE: Charge pressure tends to increase with an increase in engine speed. The lowest acceptable charge pressure is 140 psi (9.7 bar).

CHECKING HIGH PRESSURE

If the charge pressure seems to respond normally as the control handle, in the operator's cab, is moved out of the neutral position, perhaps drooping slightly but not drastically, check the high pressure gage in the right-hand console in the operator's cab. For a properly operating system, the pressure in the loop should be charge pressure when the control handle is in neutral. However, as the control handle is moved to hoist a load or swing the crane, the pressure should immediately rise to the value required by the load on the system.

INTERPRETING HIGH PRESSURE

NO HIGH PRESSURE CAN BE DEVELOPED - If there is very little or no rise in loop pressure when the control handle, in the operator's cab, is moved out of neutral, one of the high pressure relief valves, in the motor valve manifold may be seized in the open position or damaged. Since there are two high pressure relief valves, one for each direction of operation, try moving the control handle (without a suspended load) into hoist and powerdown. If pressure can be developed in one direction and not in the other, one of the relief valve poppets is probably damaged or seized. If pressure cannot be developed in either direction, a relief valve spool may be seized open. Suspected relief valves should be removed, inspected, cleaned and replaced if such is required. See figures 45 and 48 for pictorial descriptions. NOTE: When replacing a relief valve be certain the pressure setting of the replacement is correct. See "System Relief Valve Inspection".

FULL HIGH PRESSURE CANNOT BE DEVELOPED - If only partial pressure is obtained on the high pressure gage when the control handle is moved out of neutral, one of three faults may be present. Assuming charge pressure had been checked and found to be normal, the first fault may be a leaking charge pressure check valve. One or both check valves which permit the feeding of charge pump fluid into the loop may be damaged or sticking. If this condition exists, fluid is escaping from one side of the system loop into the opposite side of the system loop through the charge pump circuit. Symptoms of this fault would be fairly normal operation of the system when unloaded, but an inability to build up high pressure (therefore torque) for heavy loads. A system with this fault may also experience overheating. If the system will not develop pressure in either hoist or powerdown, a leaking check valve is not a likely fault unless, by coincidence, both check valves are damaged and leaking. If the system fails to develop pressure in one direction, inspect these valves.

The second possible fault is excessively worn piston slippers. Worn slippers cause excessive leakage of fluid into the case, seriously reducing performance of the system. Sypmtoms would be similar to leaky check valves. A major factory overhaul is recommended for the hydraulic transmission.

The third possible fault is the installation of a relief valve with a pressure setting below the specified requirement. (See "System Relief Valve Inspection"). Replace any relief valves of improper setting.

EXCESSIVE HYDRAULIC SYSTEM NOISE

Cavitation or internal pump or motor damage from contamination are the most common causes of excessive pump or motor noise. When excessive noise is apparent the following items may be the cause:

1. Dirty Charge Pump Suction Line Filter - causes cavitation of charge pump.
2. Restriction in Charge Pump Suction Line - causes cavitation of charge pump.
3. Improper Hydraulic Fluid - heavy fluids can cause cavitation.
4. Water in the Hydraulic Fluid Forming an Emulsion - can act like a heavy fluid and cause cavitation.
5. Air Entrained in the Hydraulic Fluid - causes cavitation and excessive noise. (See air in hydraulic fluid)

AIR IN HYDRAULIC FLUID

Air entrained in the hydraulic fluid can be the cause of excessive noise, low pressures and extensive damage to hydraulic components. Check all lines and connections, especially those in the charge pump suction routing, for possible leaks which would permit air to enter the system. Check the fluid level in the reservoir. A low fluid level will allow air to enter the system through the charge pump suction line.

PUMP AND MOTOR SHAFT SEAL REPLACEMENT (Figure 49)

NOTE: It is recommended that all shaft seal parts be replaced.

1. Remove the large retaining ring located on the shaft end of the pump or motor. Remove the side opposite the tangs from the groove first.

2. Remove the aluminum housing. It is held in place by the friction of the O-Ring on its outside diameter. Pry the housing toward the end of the shaft until the O-Ring is free.

3. Remove the aluminum housing from the shaft. This part is actually an assembly that is being held together by the friction of an internal O-Ring. It will normally remain assembled until physically separated.

4. Behind the aluminum housing is the bronze sealing ring. This ring is also held in place by internal O-Ring friction. Work this part free and carefully slide over the shaft.

   CAUTION: This part is easily damaged and extreme care must be exercised when handling.

5. All of the shaft seal parts, which are included in the shaft seal kit, have now been removed. It is recommended that this entire shaft seal be replaced.

6. Prior to assembly, lightly lubricate all parts with clean hydraulic fluid, place one O-Ring in the inside diameter of the aluminum housing. Place the six (6) springs in the cavities in the aluminum housing. The shaft spline should be covered with thin, clean plastic to protect the parts from damage by the shaft during assembly.

7. Slide the bronze sealing ring over the shaft and onto the shaft pilot diameter with the O-Ring facing the motor or pump. Using clean hands, work the ring into place using hand force only.

8. With clean hands, insert the stationary seal pilot into the aluminum housing, locating the notch in the stationary seal over the pin in the housing.

9. Install the O-Ring on the outside diameter of the aluminum housing then slide it into place against the bronze sealing ring. Since this is a spring loaded assembly, it may be necessary to push against the aluminum housing to expose the retaining ring grooves.

10. Install the retaining ring with the beveled side out putting the side opposite the tanks into the groove first. Be certain the retaining ring has snapped into its groove completely.

PUMP OR MOTOR SHAFT SEAL

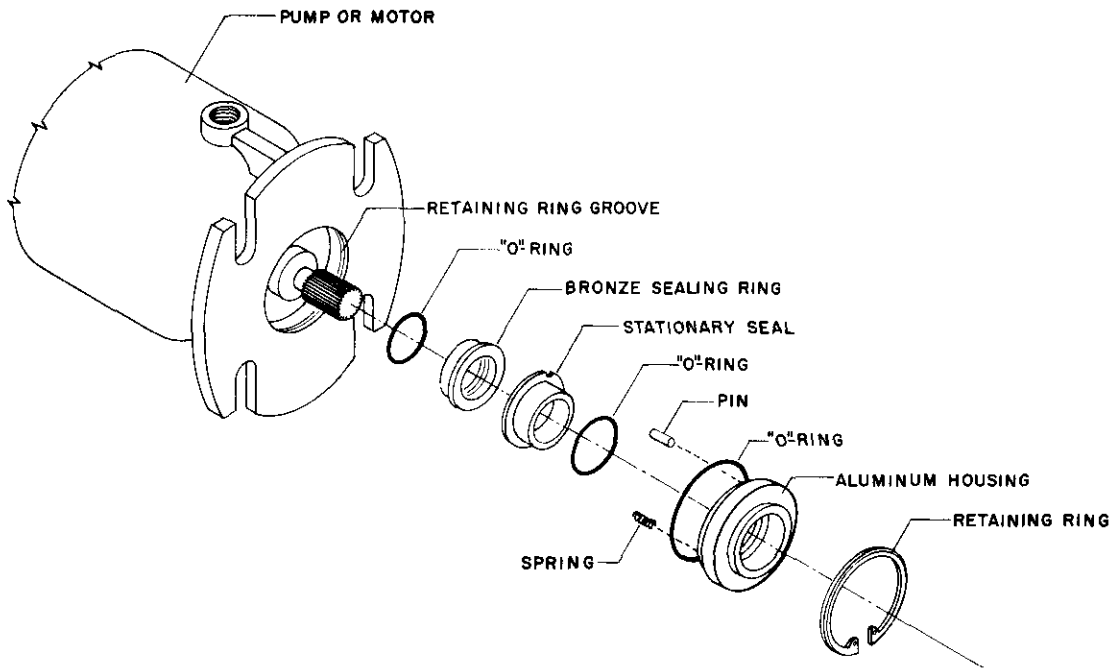


Figure 49

LT-160042

## NEUTRAL DIFFICULT OR IMPOSSIBLE TO FIND

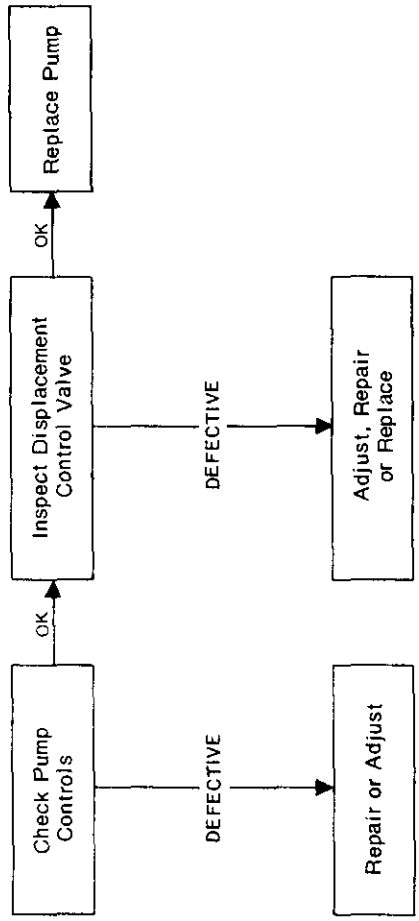

## SYSTEM OPERATING HOT

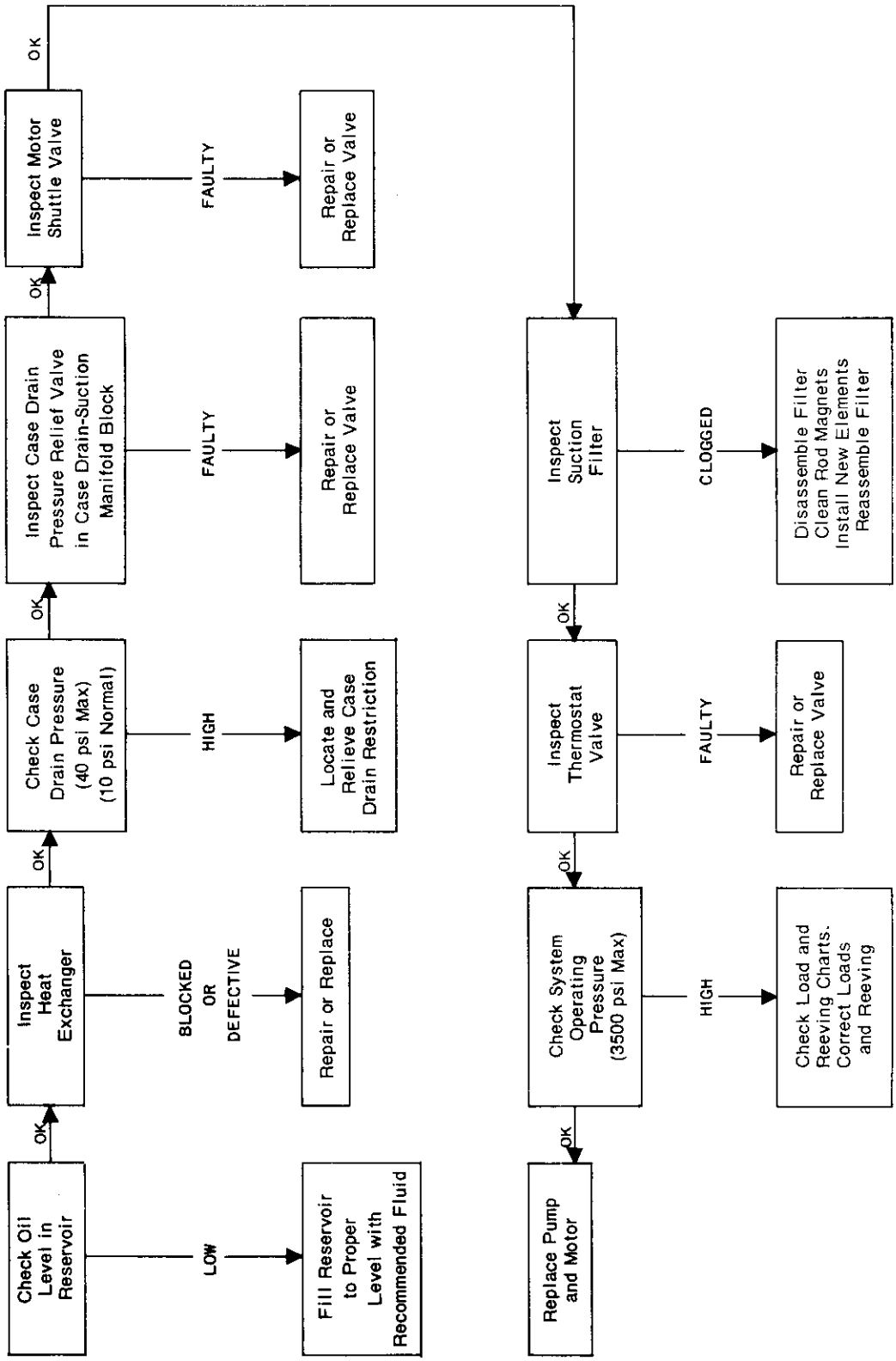


NOTE: Normal operating temperature of the hydraulic fluid is 150° to 180° F (66° to 82° C).

**WITH NOT LOAD SYSTEM OPERATES IN ONE DIRECTION ONLY**

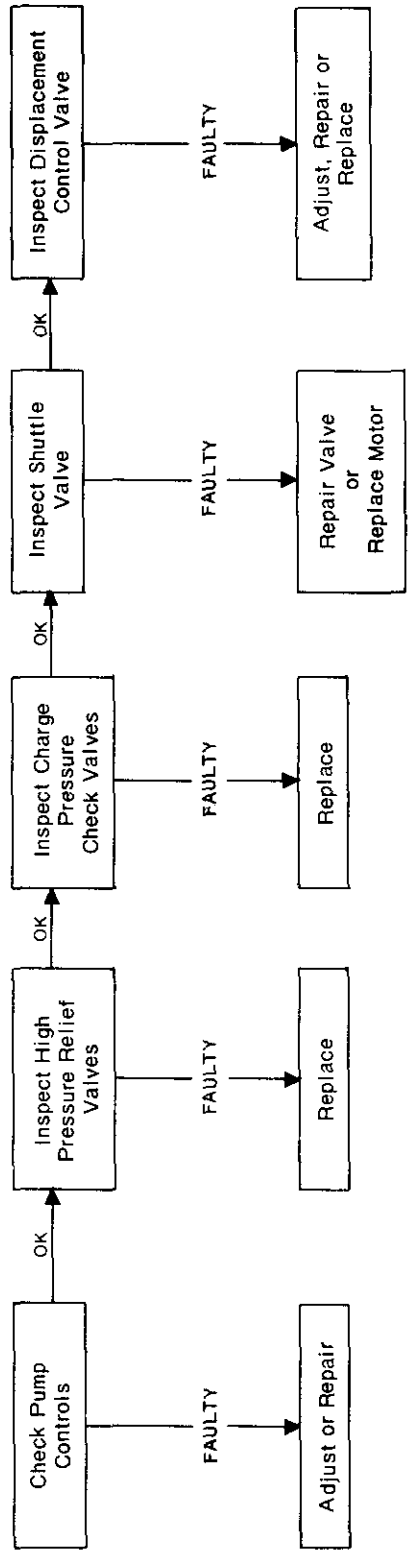

## SYSTEM RESPONSE SLUGGISH

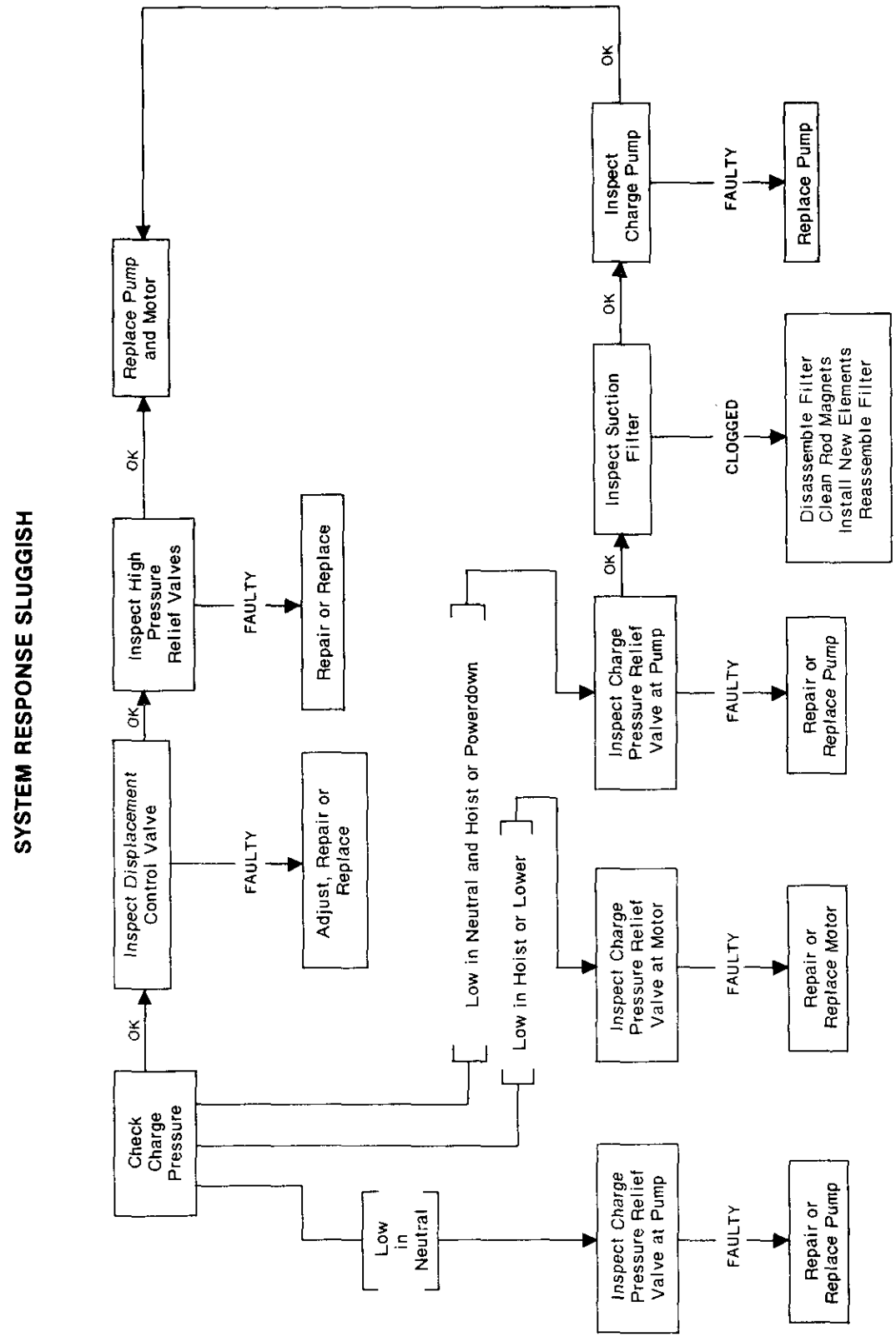

## SYSTEM WILL NOT OPERATE IN EITHER DIRECTION

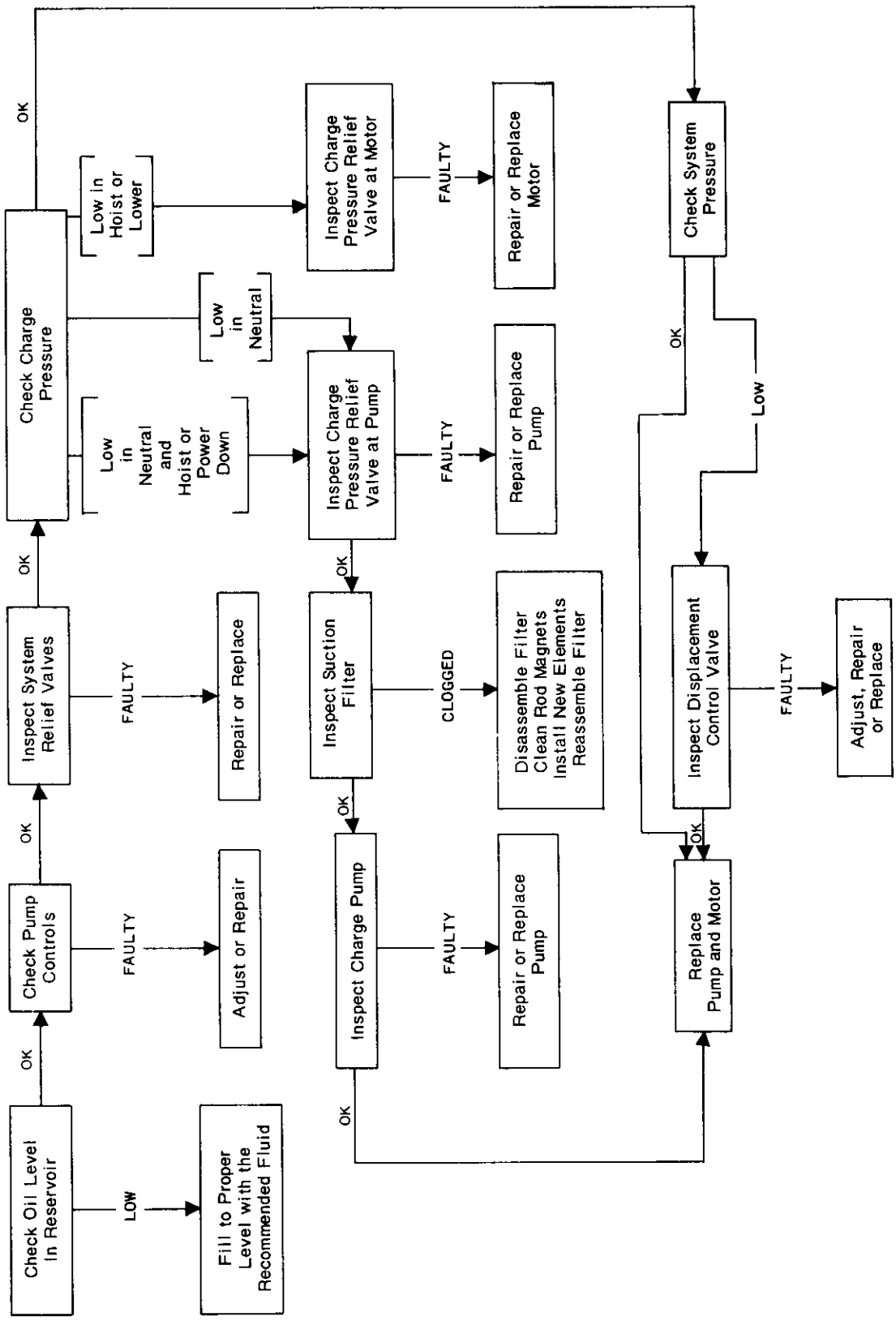

PUMP AND MOTOR PART
INSTALLATION TORQUE VALUES IN FT.-LBS.

| LOCATION | HOIST MOTORS | SWING MOTOR | MAIN/WHIP & BOOM PUMP | SWING PUMP |
|---|---|---|---|---|
| VALVE MANIFOLD BLOCK | 16 (2.2)<br>21 (2.9) | 16 (2.2)<br>21 (2.9) | — | — |
| END CAP | 240 (33.2)<br>290 (40.1) | 67 (9.3)<br>82 (11.3) | 240 (9.3)<br>290 (11.3) | 44 (6.2)<br>54 (7.5) |
| CHARGE PUMP | — | — | 27 (3.7)<br>37 (5.1) | 10 (1.4)<br>11 (1.5) |
| DISPLACEMENT CONTROL VALVE | — | — | 10 (1.4)<br>11 (1.5) | 10 (1.4)<br>11 (1.5) |
| CHARGE PRESSURE CHECK VALVES | — | — | 125 (17.3)<br>135 (18.7) | 30 (4.1)<br>40 (5.5) |
| FRONT COVER | 67 (9.3)<br>82 (11.3) | 67 (9.3)<br>82 (11.3) | 67 (9.3)<br>82 (11.3) | 45 (6.2)<br>54 (7.5) |

NOTE: Torque values in parentheses are kg-m.

## PUMP AND MOTOR REPLACEMENT

Whenever trouble shooting procedures have determined that the hydrostatic transmission must be replaced certain precautions and steps should be followed. Generally the pump and motor should be changed out as a pair. A new pump or motor can become damaged if operated in conjunction with a used unit.

As always, the prime consideration when working on the hydraulic system is to insure no contamination is introducted into the system. When replacing a pump and/or motor the following basic outline should be used. The kill valve in the operator's cab should be depressed prior to opening any hydraulic connections.

1. Remove the damaged units and replace with the new units.
2. Using the plugs and covers from the new units, cover and plug the ports of the old units. Many old units are salvageable when removed from service, but can suffer irreparable damage if not properly protected.
3. Replace all filter elements.
4. If any debris is present in the hoses or tubing, the hoses and tubing should be flushed clean with a suitable solvent and blown dry.
5. Connect all tubing and hoses replacing all related O-Rings.
6. Using clean hydrulic fluid, hand fill the pump and motor cases.
7. Fill the hydraulic tank to the proper operating level.
8. Double check all hydraulic connections which have been disturbed.
9. Double check all pump and motor mounting screws.
10. Double check the adjustment of the pump acutating cylinder.
11. Disengage the clutch.
12. Start the engine and set at the low idle speed (1000 RPM).
13. Manually engage the clutch briefly six to eight times. This action permits the pumps to receive lubrication prior to being run continuously.
14. Fully engage the clutch and observe the charge pressure in the operator's cab. The charge pressure should be 180-200 psi.
15. Observe the level of the fluid in the hydraulic tank and add fluid if necessary.
16. Operate the crane under no load, observing charge pressures.
17. Operate the crane under load, observing charge pressures. Engine RPM should be 1500 anytime a load is lifted. Charge pressure should be 160-180 psi during operation.
18. Inspect the system for hydraulic leaks and correct any abnormalities.

## PUMP AND MOTOR REPAIR

Any repair of the axial piston pumps and motors requiring the removal of the end cap or front cover is not recommended to be performed in the field. Major repairs should only be attempted by experienced, qualified and properly equipped personnel. Only minor repairs, such as those discussed in the hydrostatic drive trouble shooting section, should be performed in the field.

## EMERGENCY LOAD LOWERING

In an emergency created by the loss of control pressure, loss of air pressure, loss of diesel power or malfunction of the hydraulic transmission, a load can be lowered by the following procedure. WARNING: THIS PROCEDURE IS NOT FOR USE ON THE BOOM HOIST SYSTEM.

1. Kill the diesel engine.
2. Engage the clutch by hand.
3. Remove the shuttle valve spool from the hydraulic motor of the hoist which must be lowered. Note the orientation of the valve spool and replace the plugs in the manifold block.
4. Remove the hose from the bottom of the brake cylinder of the hoist which must be lowered and connect a hand operated hydraulic pump to the brake cylinder.
5. Slowly apply hydraulic pressure to the brake cylinder until the wire rope drum begins to turn. The speed of the drum should not exceed 30 RPM. The drum can be slowed or stopped by lowering the pressure to the brake cylinder. CAUTION: Do not over pressure the brake cylinder. Maximum pressure should not exceed 800 psi (55.2 bar).
6. Upon completion of the lowering, clean and properly re-install the shuttle valve spool, reconnect the hose to the brake cylinder and disengage the clutch by hand.

   NOTE: Light line loads may not be able to over come the friction forces in the hoist system even when the brake is fully released.

## CRANE START-UP PROCEDURE AFTER STORAGE OR SHIPPING

The following procedure is recommended when starting a crane that has been in storage, either after field use or as shipped from the plant. This procedure will aid in instructing new operators on the correct method of starting the crane, and help to assure that essential maintenance points are not overlooked. After completion of this procedure and when the crane is in normal service, the maintenance check lists found on pages 0 and 0 should be followed to assure proper care and operation of the crane.

1. Check the air supply regulator to see that it is set in the proper operating range, 95/100 psi.
2. Open the air reservoir drain valve and purge any water or debris that may have accumulated during storage.
3. Check the fluid levels in the air line lubricators.
4. Open the pump suction line valve beneath hydraulic tank, and insert the channel shaped valve lock over the valve stem.
5. Check the hydraulic tank oil level to see that oil appears in the upper portion of the tank sight glass.
6. Open the two valves beneath the diesel fuel tank.
7. Check diesel fuel level.
8. Check engine oil and coolant levels, and condition of engine air cleaner.
9. Check shaft assembly, pump drive housing, and swing gear box oil levels. See page 13 for recommended lubricants.
10. Manually operate clutch to check its adjustment. Adjust as described on page 63.
11. Disengage clutch.
12. Check to see that the circuit breaker for the hydraulic tank heater is turned to "ON", and that the heater's thermostat knob (if equipped) is set at 80°F.
13. Turn the engine glow plug and 24 VDC transformer circuit breaker to "ON".
14. Pull the engine kill valve. The air and power pilot light should come on.
15. Pull engine start valve. Release valve immediately when engine starts.

    COLD WEATHER STARTING NOTES:

    Cranes Equipped With Caterpillar Engines - If the ambient air temperature is less than +60°F (16°C), it is recommended that the glow plug button be pushed for approximately 30 seconds prior to engine cranking.

    Cranes Equipped with Detroit Diesel Engines* - If the ambient air temperature is in the +35°F (2°C) to -20°F (-29°C) range, it is recommended that the ether "QuickStart" knob be pulled for approximately two seconds while cranking engine,

    *Note: New cranes shipped from the Gainesville Plant do not have the either cylinder installed in the "Quick Start" mechanical valve. The cylinder is mounted directly above the valve, and must be screwed into the valve prior to operating the system for cold weather start-ups.

16. Check engine gages and allow engine to warm up at low idle speed.

17. Engage clutch and allow hydraulic oil to warm up at low idle speed. Check for leakage in hydraulic system.

18. Observe main, boom and swing charge pressures to be sure they are in the proper operating range, 160/300 psi.

19. Observe pump drive housing lube oil gage to see if it is in the proper operating range, 20/40 psi.

20. Observe control pressure to see if it is in the proper operating range, 700/750 psi.

21. Check all "brake off" indicators by pulling the swing brake valve, and by moving the main and boom handles slightly out of neutral.

22. Check swing, boom, hoist control handles for proper centering when released.

23. Operate the emergency brake set to assure its operation. On the main, and whip boom hoists the drums will not rotate and the brakes will not release with the brake set valve depressed.

24. Check the brake adjustments as described on pages 57 and 58.

25. Lubricate crane as described on page 14.

26. Check operation of the line travel limiter system. See page 67.

27. Check the operation of the boom angle limiter system. See page 65.

28. If the crane has wire rope spooled on hoist drums, the wire rope should be thoroughly inspected and lubricated before placing crane into service. See page 73.

29. Check operation of load-radius indicating devices installed on crane. See Load Indicating System instructions.

30. Check the operation of boom lights and beacon lights, if so equipped.

# PARTS LIST

OS-435

ZAPATA OFFSHORE COMPANY
THIS BOOK APPLIES TO
NATIONAL ORDER NO. 55E-15463-102
NATIONAL SUPPLY SPECIFICATION
X16-5148
S/N 344 & 345

## PREFACE

National Hydraulic Pedestal Cranes are manufactured by National Supply Company, Division of Armco Inc., at the Gainesville, Texas Plant.

An identification plate is located in the engine compartment. It provides such information as Model, Type, Serial Number and Specification Number.

NOTE: This Parts List applies only to Cranes with Serial Numbers above Serial Number G-269.

HOW TO ORDER

To insure receiving the proper material:

A. Use part number and description. Do not use reference numbers.

B. Be sure part number and description agree; also check footnotes.

C. Give full description of crane, including Model, Type, Specification Number and Serial Number.

D. Order by number of pieces and not by sets, unless so stipulated in parts list.




NATIONAL OILWELL
P.O. BOX 4638
HOUSTON, TEXAS 77210–4638

As used herein, any references to National shall be deemed to mean National Oilwell.

## NOTES

| REV. | DESCRIPTION | CHK'D BY | DATE | C N |
|---|---|---|---|---|
| A | RE-DRAWN W/ CHANGES | LDL | 6-22-82 | 82-380 |

| ITEM | DWG. SIZE | PART NUMBER | DESCRIPTION | QTY. |
|---|---|---|---|---|
| **GANTRY AND RELATED PARTS:** | | | | |
| 1. | E | 1612400 | Assembly, Gantry | 1 |
| 2. | D | 1601414 | Spring | 2 |
| 3. | D | 1601438 | Pin | 2 |
| 4. | - | 6501608 | Pin, Cotter 1/4"x1" | 4 |
| 5. | C | 1601437 | Plunger | 2 |
| 6. | A | 01-1612009-801 | Beacon, 120V, E.P., Boom & Gantry | 1 |
| 7. | D | 7802469-001 | Cable, Perille 600V, 1.5 mm, 3 Cond. | 135' |
| 8. | - | 7000394-11 | Screw, H.H. Cap 5/8"x1-1/4" Gr.5,C.P. (F/Ladder) | 6 |
| 9. | - | 7619058 | Washer, Reg. Spring Lock 5/8" C.P. (F/Ladder) | 6 |
| 10. | - | 7000443-11 | Screw, H.H. Cap 3/4"x2-3/4" Gr.5 C.P. (F/Landing) | 4 |
| 11. | - | 7619066 | Washer, Reg. Spring Lock 3/4" C.P. (F/Landing) | 4 |
| 12. | - | 6300121 | Nut, Hex 3/4" C.P.(F/Landing) | 4 |
| 13. | - | 7000609-14 | Screw, H.H. Cap 1-1/4"x3-3/4" Gr.8 Nkl.Pltd.(F/Pad). | 12 |
| 14. | - | 7620098 | Washer, Spring Lock 1-1/4" | 12 |
| **POWER ASSEMBLY AND RELATED PARTS:** | | | | |
| 1. | E | 1612009-100 | Assembly, Power | 1 |
| 2. | A | G-1612154 | Bearing, Swing | 1 |
| 3. | D | G-2405045 | Screw, Dr. Hd. Cap 1-1/2"x9" Gr.8 (F/ Bearing) | 72 |
| 4. | D | X16-1536-P | Washer, Hdn. 1-1/2" (F/ Bearing) | 72 |
| 5. | D | G-2405047 | Screw, Dr. Hd. Cap 1-3/4"x9" Gr.8 (F/ Bearing) | 60 |
| 6. | D | G-1613802-P | Washer, Hdn. 1-3/4" (F/ Bearing) | 60 |
| 7. | D | X16-1704-1 | Shim, .003" (F/ Bearing) | 40 |
| 8. | D | X16-1704-2 | Shim, .005" (F/ Bearing) | 40 |
| 9. | D | X16-1704-3 | Shim, .007" (F/ Bearing) | 32 |
| 10. | D | X16-1704-4 | Shim, .020" (F/ Bearing) | 40 |
| 11. | D | X16-1704-5 | Shim, .015" (F/ Bearing) | 40 |
| * 12. | A | 1612097 | Flange, Mounting w/ Welding Note Labels | 1 |
| 13. | A | 1612009-805 | Ring, Collector | 1 |
| 14. | D | 1612007-801 | Bar, Tie (F/ Collector Ring) | 1 |
| 15. | A | 1614826 | Catwalk | 1 |
| 16. | A | 1613885 | Handrail | 1 |
| 17. | B | X16-1808 | Skid, Shipping | 1 |
| 18. | A | GX16-2193 | Cover, Oil Protection | 1 |
| 19. | - | 7822095 | Wire, SST .064" Dia. | 100' |
| 20. | - | 7802362 | Connector, W/H C5205x16 (F/ Collector Ring) | 1 |
| 21. | - | 7000212-11 | Screw, H.H. Cap 3/8"x2" Gr.5 C.P. (F/Collector Ring) | 7 |
| 22. | - | 7619041 | Washer, Reg. Spring 3/8" C.P. (F/ Collector Ring) | 7 |
| 23. | - | 6300062 | Nut, Hex 3/8" C.P. (F/ Tie Bar) | 3 |
| 24. | - | 7624019 | Washer, Snubbing (F/ Tie Bar) | 2 |
| 25. | - | 7621024 | Washer, Type A Narrow 3/8" C.P. (F/ Tie Bar) | 2 |
| 26 | B | 1612009-806 | Box Cpt., Junction (Coll. Ring) | 1 |
| **BOOM AND RELATED PARTS:** | | | | |
| 1. | C | G-1615083 | Assembly, Boom Base | 1 |
| 2. | D | 1615013 | Extension, 30' | 2 |
| 3. | A | 1615003 | Assembly, Point | 1 |
| 4. | B | 1615015 | Extension, Sheave | 1 |
| 5. | D | G-1620770 | Pin, Hi/Lo Throwout | 1 |
| 6. | - | 6300062 | Nut, Hex 3/8" C.P. (F/Pin) | 1 |
| 7. | B | 1615026 | Indicator, Boom Angle | 1 |
| 8. | B | 1605629 | Indicator, Boom Angle | 1 |
| 9. | B | 1616025 | Assembly, Boom Saver (120' Boom) | 1 |
| 10. | - | 7819106-0 | Tubing, Snyflex 1/4" | 142' |
| 11. | - | 7819107-0 | Tubing, Snyflex 3/8" | 142' |
| 12. | - | 7819048 | Ty-Rap | 32 |
| 13. | C | 1612456 | Assembly, Boom Hoist Block | 1 |
| 14. | A | 1616019 | Assembly, Load Weighing - For Markload | 1 |

* Label is form 76-5 quantity 5 required.

| ITEM | DWG. SIZE | PART NUMBER | DESCRIPTION | QTY. |
|---|---|---|---|---|
| **BOOM AND RELATED PARTS:** (Continued) | | | | |
| 15. | C | 1612427 | Support, Block (120' Boom) | 2 |
| 16. | D | 1605664 | Pin (F/ Support) | 4 |
| 17. | D | 1605735 | Bushing (F/ Support) | 4 |
| 18. | - | G-6501620-S | Pin, Cotter (F/ Support) | 4 |
| 19. | A | 03-1612008-813 | Installation, Boom & Sheave Ill. Lights | 1 |
| 20. | D | 7802469-001 | Cable, Perilli 600V, 1.5 mm, 3 Cond. | 325' |
| **MISCELLANEOUS PARTS:** | | | | |
| 1. | D | 7801083 | Block, 3 Sheave Hoist | 1 |
| 2. | D | 7801012 | Ball, Overhaul | 1 |
| 3. | - | 7802210 | Clip, Crosby Wire Rope 7/8" | 1 |
| 4. | - | 7802217 | Clip, Crosby Wire Rope 1" | 1 |
| 5. | D | 7817069-135 | Rope, Wire 1" 6x26 Boom | 1350' |
| 6. | D | 7817220-180 | Rope, Wire 7/8" 10x19 Main | 1800' |
| 7. | - | 7817078-080 | Rope, Wire 1" 19x7 Whip | 800' |
| 8. | A | X16-2302-009 | System, Markload Load Weighing | 1 |
| 9. | D | X16-1509 | Gage, Pressure | 1 |
| 10. | D | X16-1660 | Wrench, Brake Adj. | 1 |
| 11. | D | X16-2048 | Wrench, Hose | 1 |
| 12. | D | X16-2049 | Wrench, Hose | 1 |
| 13. | D | 7815241 | Plug | 2 |

NOTE: ALL PRIMARY AND SECONDARY COATINGS TO BE IN ACCORDANCE WITH SPEC. PP-108 WITH TOP COAT COLOR TO CUSTOMER SPEC.

RIG UP DATA: Prints to be supplied: E-1612400, A-1612009-801, E-1612009-100, A-1614826, A-1613885, A-GX16-2193, A-1616025, A-1616019, E-X16-8026, B-1612009-803, C-X16-2312, B-1612009-810
ILLUSTRATED PARTS LIST PAGES (10-80): D-24
OPERATOR'S MANUAL (7-80): 5-15, 57-59, 63, 65, 66, 69-72
MISCELLANEOUS: TD-16001

NOTE: Two (2) sets of above listed rig-up prints to be supplied as follows:
a. Place one (1) set in crane cab after painting.
b. Send one (1) set to Crane Product Group in Houston office with request that prints be forwarded to NSCO serviceman being dispatched to rig for crane installation.

FAVOR CONSULTAR NO SISTEMA, POIS PODERÁ EXISTIR REVISÕES MAIS ATUALIZADAS

02

FOR: Zapata Offshore #55E-15463-102

| ITEM | DWG SIZE | PART NUMBER | DESCRIPTION | REQ'D |
|---|---|---|---|---|
| ALLOWABLE MACHINE TOLERANCES UNLESS OTHERWISE SPECIFIED: FRACTIONS ± .015" ANGLES ± 0° 30' | MATERIAL | | VENDOR | HARDNESS |
| ARMCO National Supply Company, Division of Armco Steel Corporation, Gainesville, TX | CRANE COMPLETE, OS-435 w/ Cat 3408, 120' Boom 120V AC, API-2C | | | |
| SCALE | SUPERSEDES A RE | DRAWN 6/15/82 | BY JC | C PART NUMBER X16-5148 |
| SURFACE FINISH RMS | ASSEMBLY NUMBER | SUPERSEDED BY | CHECKED | BY |

X16-5148

A

## CAB ASSEMBLY

NOT APPLICABLE
TO THIS ORDER

SEE DRAWING 1612009-600

.....IN APPENDIX

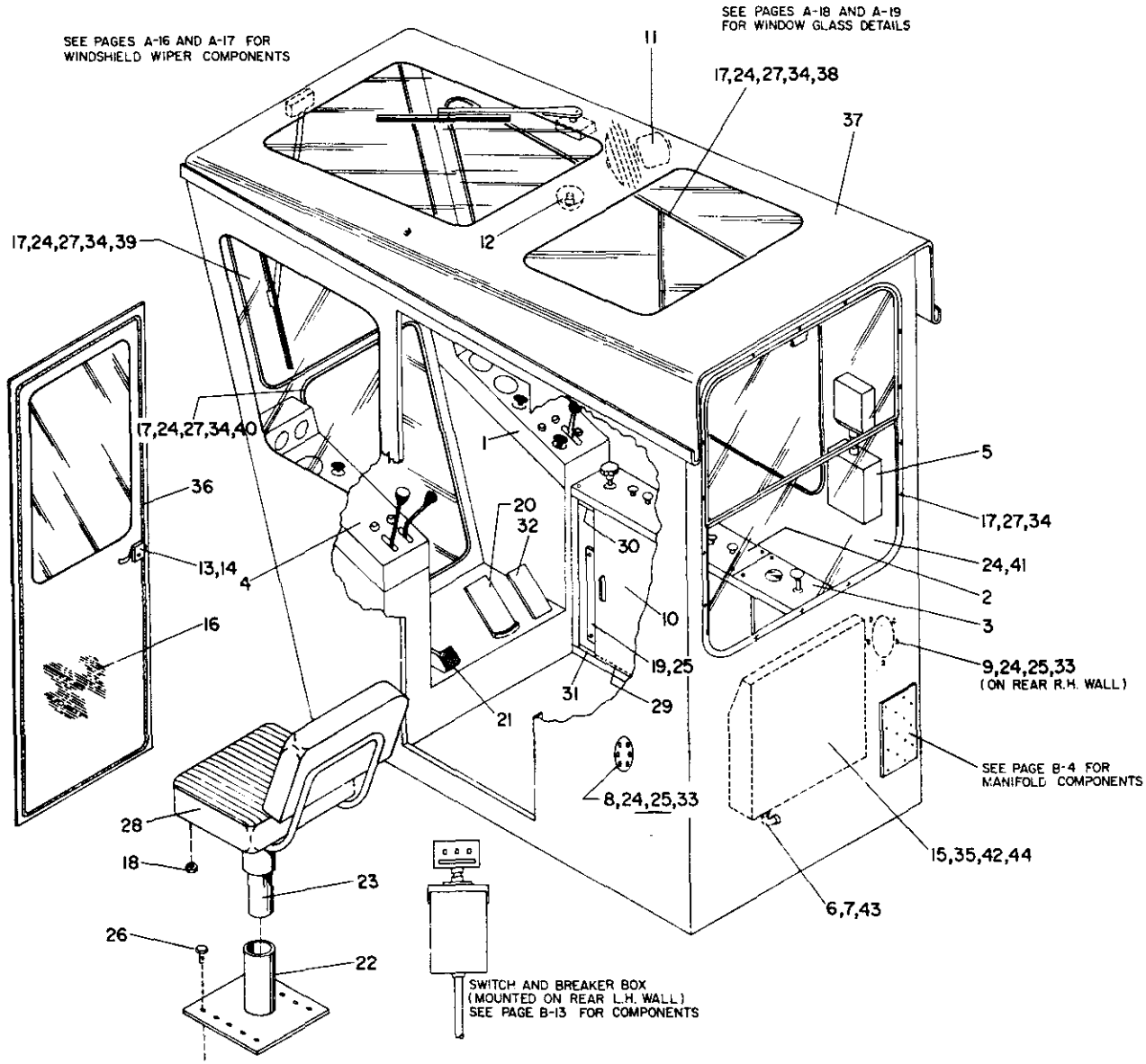


LT-160321

## CAB ASSEMBLY

| Item No. | Part No. | Description | No. Req'd. |
|---|---|---|---|
| 1 | G-1613684 | ASSEMBLY, Right-Hand Console (See Page A-5) | 1 |
| 2 | G-1613685 | ASSEMBLY, Right-Hand Side Front Panel (See Page A-7) | 1 |
| 3 | G-1613686 | ASSEMBLY, Right-Hand Side Rear Panel (See Page A-8) | 1 |
| 4 | G-1613698 | ASSEMBLY, Left-Hand Console (See Page A-3) | 1 |
| 5 | 1617662 | ASSEMBLY, Electrical Box (See Page B-12) | 1 |
| 6 | 7801151 | BUSHING, Conduit, Esco #122-1/2" | 1 |
| 7 | 7802255 | CONNECTOR, Crouse-Hinds #CGB-193, 1/2" x 90° | 1 |
| 8 | 1614622 | COVER | 1 |
| 9 | 1614623 | COVER | 1 |
| 10 | G-1613689 | DOOR, Sliding | 2 |
| 11 | 1612604 | FAN, Defrost | 1 |
| 12 | G-7811039 | FIXTURE, Dome Light, Requires: 1—7811009 LAMP, Wesco #305, 24V | 1 |
| 13 | 7807003 | HANDLE, Outside Door | 1 |
| 14 | 7807008 | HANDLE, Inside Door | 1 |
| 15 | 1617663 | HEATER, Cab (240 Volt) | 1 |
| | 1617670 | HEATER, Cab (120 Volt) | 1 |
| 16 | 7808025 | INSULATION (Order by Square Foot) | As Req'd. |
| 17 | 6300001 | NUT, #10-24 Hex, Cadmium Plated | As Req'd. |
| 18 | 6310052 | NUT, Flexloc 21FK, 5/16"-24 UNF, Cadmium Plated | 4 |
| 19 | G-1613697 | PANEL, Valve (See Page A-14) | 1 |
| 20 | 1600657 | ASSEMBLY, Brake Pedal (See Page A-13) | 1 |
| 21 | 1617649 | ASSEMBLY, Boom Hoist Foot Pedal (See Page A-12) | 1 |
| 22 | 1617630 | PEDESTAL, Lower | 1 |
| 23 | 1617631 | PEDESTAL, Upper | 1 |
| 24 | 7817170 | RUBBER, Neoprene Sponge, 3/16" x 2" | As Req'd. |
| 25 | 7000106-11 | SCREW, Hex Head Cap, 1/4" x 3/4", Grade 5, Cadmium Plated | 17 |
| 26 | 7000209-11 | SCREW, Hex Head Cap, 3/8" x 1-1/4", Grade 5, Cadmium Plated | 4 |
| 27 | 7055091-01 | SCREW, Filister Head Machine, #10-24 x 5/8", Cadmium Plated | As Req'd. |
| 28 | 7818329 | SEAT | 1 |
| 29 | 1610749 | STRIP, Wear | 46" |
| 30 | 7819016 | TRACK, Upper | 1 |
| 31 | 7819017 | TRACK, Lower | 1 |
| 32 | 7500097 | VALVE, Foot Pedal Throttle | 1 |
| 33 | G-7608061 | WASHER, 1/4" Barseal | 11 |
| 34 | 7619025 | WASHER, #10 Regular Spring Lock, Cadmium Plated | As Req'd. |
| 35 | 7619037 | WASHER, 5/16" Regular Spring Lock, Cadmium Plated | 4 |
| 36 | 7822016 | WEATHERSTRIP, Door | As Req'd. |
| 37 | G-1613660 | WELDMENT, Cab | 1 |
| 38 | G-1613691 | WINDOW, Right-Hand Sliding (Frame and Glass) | 1 |
| 39 | 1617646 | WINDOW, Upper Front (Frame and Glass) | 1 |
| 40 | 1617647 | WINDOW, Lower Front (Frame and Glass) | 1 |
| 41 | 1617648 | WINDOW, Rear Sliding (Frame and Glass) | 1 |
| 42 | 6300051 | NUT, 5/16" Hex, Cadmium Plated | 4 |
| 43 | 7813045 | NUT, 1/2" Conduit Lock | 1 |
| 44 | 7000157-11 | SCREW, Hex Head Cap, 5/16" x 1", Grade 5, Cadmium Plated | 4 |

NOT APPLICABLE
TO THIS ORDER

SEE DRAWING 1612009-600

IN APPENDIX

## LEFT-HAND CONTROL ASSEMBLY (G-1613698)

NOT APPLICABLE
TO THIS ORDER

SEE DRAWING 1613683

.....IN APPENDIX

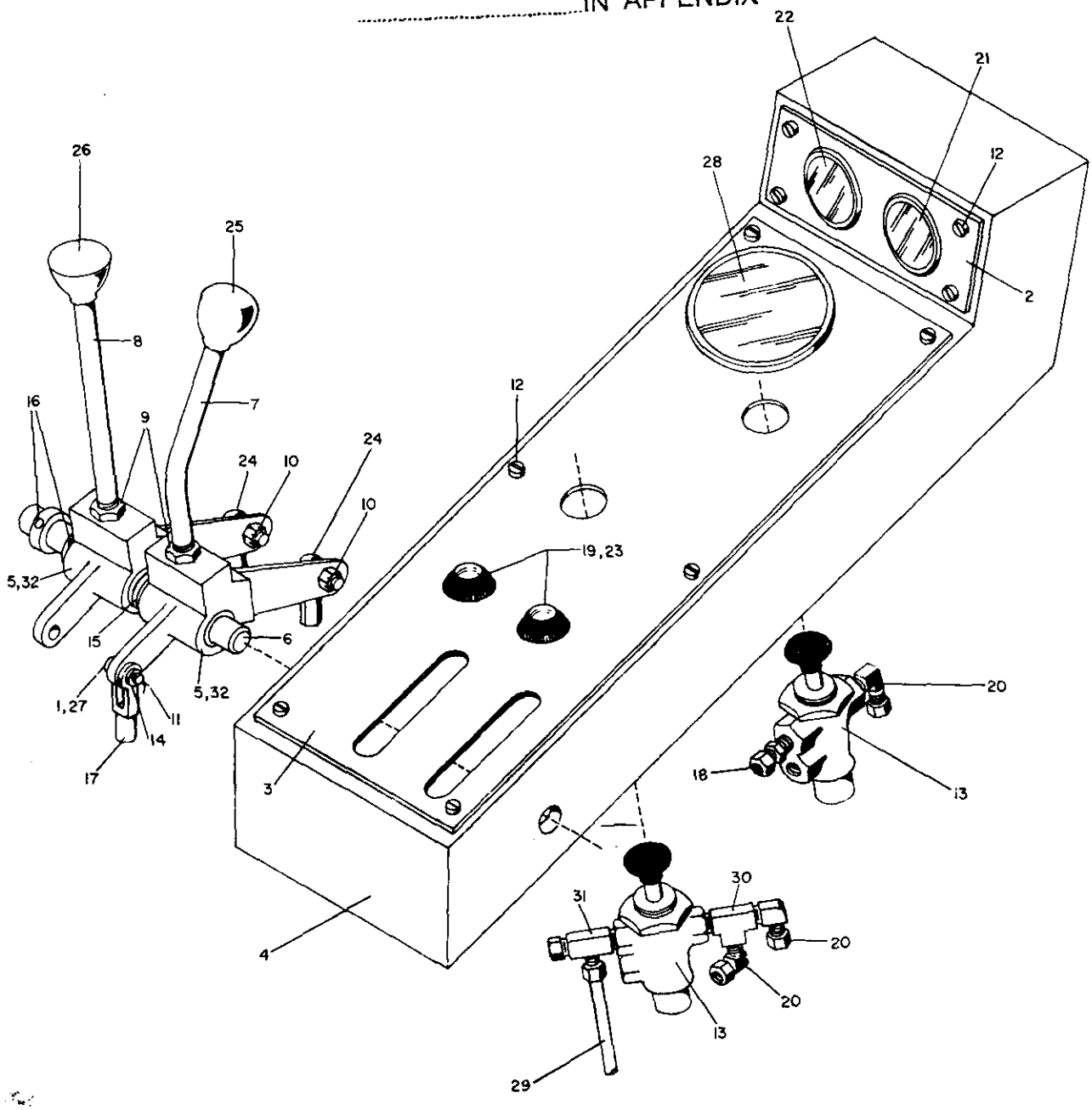


LT-160062

## LEFT-HAND CONTROL CONSOLE ASSEMBLY (G-1613698)

| Item No. | Part No. | Description | No. Req'd. |
|---|---|---|---|
| 1 | 1612648 | BUSHING | 1 |
| 2 | 1613647 | PANEL, Engine Gage | 1 |
| 3 | 1613675 | PANEL, Left-Hand Control | 1 |
| 4 | 1617614 | PANEL, Console Housing | 1 |
| 5 | 1617615 | LEVER | 2 |
| 6 | 1617618 | SHAFT | 1 |
| 7 | 1617624 | HANDLE, Boom Hoist Control | 1 |
| 8 | 1617626 | HANDLE, Swing Control | 1 |
| 9 | 6300081 | NUT, 1/2" Hex, Cadmium Plated | 2 |
| 10 | 6310061 | NUT, Flexloc #21 FK-624, 3/8"-24 UNF | 2 |
| 11 | 6500608 | PIN, Cotter, 3/32" x 1" | 1 |
| 12 | 7053104-13 | SCREW, Pan Head Machine, 1/4" x 1/2", Nickle Plated | 10 |
| 13 | 7500104 | VALVE, Emergency Brake Set and Swing Brake, Includes: 4 —7815238 PACKING, O-Ring (Spool Seals) | 2 |
| 14 | 7621016 | WASHER, 1/4" Type A Narrow, 0.625" O.D., Cadmium Plated | 1 |
| 15 | 7621044 | WASHER, 3/4" Type A Narrow, 1.469" O.D., Cadmium Plated | 3 |
| 16 | 7802110 | COLLAR, 3/4" | 2 |
| 17 | 7802340 | CLEVIS | 1 |
| 18 | 7802478 | CONNECTOR, Weatherhead #1468 x 4 x 4K | 1 |
| 19 | 7804220 | ELBOW, Weatherhead #1469 x 4K | 2 |
| 20 | 7804223 | ELBOW, Weatherhead #1469 x 4 x 4K | 3 |
| 21 | 7806065 | GAGE, Oil Pressure (Electrical), Requires: 1 —7811043 BULB, Face Illumination 1 —7817189 RESISTOR | 1 |
| | 7806021 | GAGE, Oil Pressure (Mechanical), Requires: 1 —7802477 CONNECTOR, Weatherhead #1468 x 4 K 1 —7802481 CONNECTOR, Parker-Hannifin #66 NTA-4-2 20'—7819106-0 TUBING, 1/4" Synflex | 1 |
| 22 | 7806066 | GAGE, Engine Coolant Temperature (Electrical), Requires: 1 —7811043 BULB, Face Illumination 1 —7817189 RESISTOR | 1 |
| | 1601079 | GAGE, Engine Coolant Temperature (Mechanical) | 1 |
| 23 | 7808024 | INDICATOR, Brake Off | 2 |
| 24 | 7809015 | JOINT, Ball | 2 |
| 25 | 7810023 | KNOB, Ball | 1 |
| 26 | 7810024 | KNOB, Ball | 1 |
| 27 | 7815018 | PIN | 1 |
| 28 | 7819041 | TACHOMETER, G.M. Engine (Electrical), Includes: 1 —7811043 BULB, Face Illumination | 1 |
| | 7819042 | TACHOMETER, Caterpillar Engine (Electrical), Includes 1 —7811043 BULB, Face Illumination | 1 |
| | G-7819044 | TACHOMETER, G.M. Engine (Mechanical), Requires: 1 —G-7802785 CABLE | 1 |
| | 7819090 | TACHOMETER, Caterpillar Engine (Mechanical), Requires: 1 —G-7802468 CABLE | 1 |
| 29 | 7819106-0 | TUBING, 1/4" Synflex | As Req'd. |
| 30 | 7819111 | TEE, Weatherhead #3750 x 4 | 1 |
| 31 | 7819142 | TEE, Parker-Hannifin #271 NTA-4-4 | 1 |
| 32 | ZB-0756 | BEARING | 4 |

NOT APPLICABLE TO THIS ORDER

SEE DRAWING 1613683 IN APPENDIX

## SWING CONTROL VALVE LINKAGE

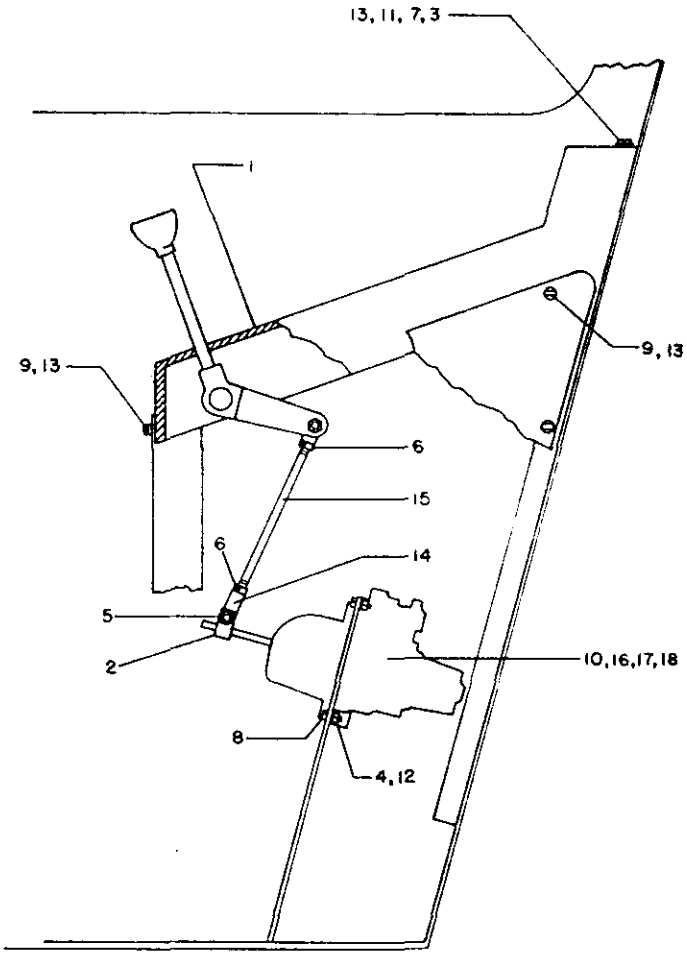


LT-160064

| Item No. | Part No. | Description | No. Req'd. |
|---|---|---|---|
| 1 | G-1613683 | ASSEMBLY, Left-Hand Control Console | 1 |
| 2 | 1617617 | LINK, Connecting | 1 |
| 3 | 6300041 | NUT, 1/4" Hex, Cadmium Plated | 2 |
| 4 | 6300051 | NUT, 5/16" Hex, Cadmium Plated | 3 |
| 5 | 6310061 | NUT, Flexloc #21FK-624, 3/8"-24 UNF | 1 |
| 6 | 6320063 | NUT, Hex Jam, 3/8"-24 UNF, Cadmium Plated | 2 |
| 7 | 7000109-11 | SCREW, Hex Head Cap, 1/4" x 1-1/4", Grade 5, Cadmium Plated | 2 |
| 8 | 7000157-11 | SCREW, Hex Head Cap, 5/16" x 1", Grade 5, Cadmium Plated | 3 |
| 9 | 7053106-13 | SCREW, Pan Head Machine, 1/4" x 3/4", Nickel Plated | 10 |
| *10 | 7500245-001 | VALVE, Swing Control | 1 |
| 11 | 7619033 | WASHER, 1/4" Regular Spring Lock, Cadmium Plated | 2 |
| 12 | 7619037 | WASHER, 5/16" Regular Spring Lock, Cadmium Plated | 3 |
| 13 | 7621016 | WASHER, 1/4" Type A Narrow, 0.625" O.D., Cadmium Plated | 12 |
| 14 | 7809015 | JOINT, Ball | 1 |
| 15 | 7817706 | ROD, Threaded, 3/8"-24 UNF x (As Req'd.) | 1 |
| 16 | 7802478 | CONNECTOR, Weatherhead #1468 x 4 x 4K (Port #3) | 1 |
| 17 | 7804223 | ELBOW, Weatherhead #1469 x 4 x 4K (Port #1) | 1 |
| 18 | 7819142 | TEE, Parker-Hannifin #271 NTA-4-4 (Port #2) | 1 |

*NOTE: Rebuild Kit may be purchased per part no. 1617297 KIT, 7500245-001 Valve Repair.

## BOOM HOIST CONTROL VALVE LINKAGE

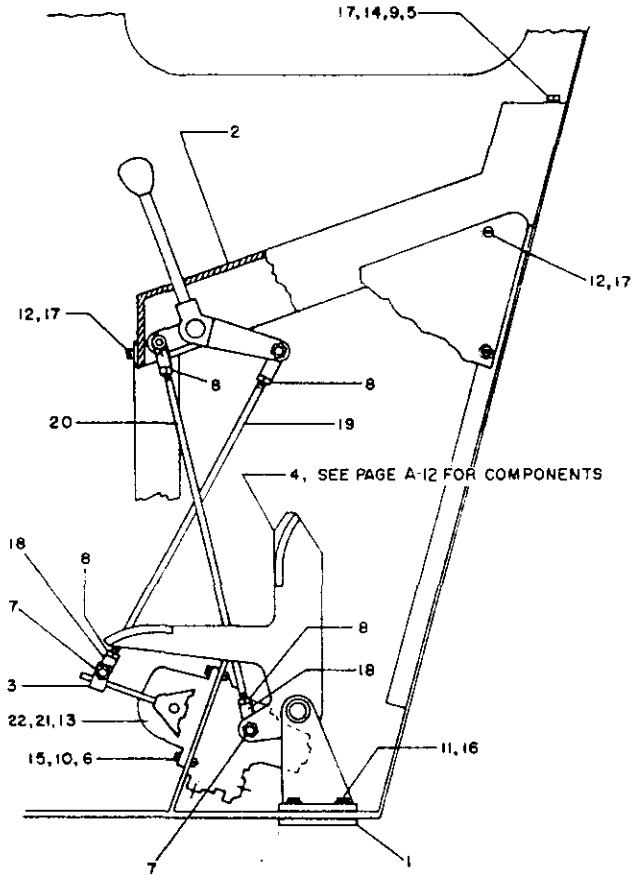


LT-160065

| Item No. | Part No. | Description | No. Req'd. |
|---|---|---|---|
| 1 | 1607667 | PLATE, Foot Pedal Bolting | 1 |
| 2 | G-1613683 | ASSEMBLY, Left-Hand Control Console | 1 |
| 3 | 1617617 | LINK, Connecting | 1 |
| 4 | 1617649 | ASSEMBLY, Boom Hoist Foot Pedal | 1 |
| 5 | 6300041 | NUT, 1/4" Hex, Cadmium Plated | 2 |
| 6 | 6300051 | NUT, 5/16" Hex, Cadmium Plated | 3 |
| 7 | 6310061 | NUT, Flexloc #21 FK-624, 3/8"-24 UNF | 2 |
| 8 | 6320063 | NUT, Hex Jam, 3/8"-24 UNF, Cadmium Plated | 4 |
| 9 | 7000109-11 | SCREW, Hex Head Cap, 1/4" x 1-1/4", Grade 5, Cadmium Plated | 2 |
| 10 | 7000157-11 | SCREW, Hex Head Cap, 5/16" x 1", Grade 5, Cadmium Plated | 3 |
| 11 | 7000304-11 | SCREW, Hex Head Cap, 1/2" x 1-1/4", Grade 5, Cadmium Plated | 2 |
| 12 | 7053106-13 | SCREW, Pan Head Machine, 1/4" x 3/4", Nickel Plated | 10 |
| *13 | 7500245-001 | VALVE, Boom Hoist Control | 1 |
| 14 | 7619033 | WASHER, 1/4" Regular Spring Lock, Cadmium Plated | 2 |
| 15 | 7619037 | WASHER, 5/16" Regular Spring Lock, Cadmium Plated | 3 |
| 16 | 7619050 | WASHER, 1/2" Regular Spring Lock, Cadmium Plated | 2 |
| 17 | 7621016 | WASHER, 1/4" Type A Narrow, 0.625" O.D, Cadmium Plated | 10 |
| 18 | 7809015 | JOINT, Ball | 2 |
| 19 | 7817706 | ROD, Threaded, 3/8"-24 UNF x (As Req'd.) | 1 |
| 20 | 7817706 | ROD, Threaded, 3/8"-24 UNF x (As Req'd.) | 1 |
| 21 | 7802478 | CONNECTOR, Weatherhead #1468 x 4 x 4K (Port #3) | 1 |
| 22 | 7804223 | ELBOW, Weatherhead #1469 x 4 x 4K (Ports #1 and #2) | 2 |

*NOTE: Rebuild Kit may be purchased per part no. 1617297 KIT, 7500245-001 Valve Repair.

## MAIN AND WHIP BRAKE PEDAL ASSEMBLY (1600657)*

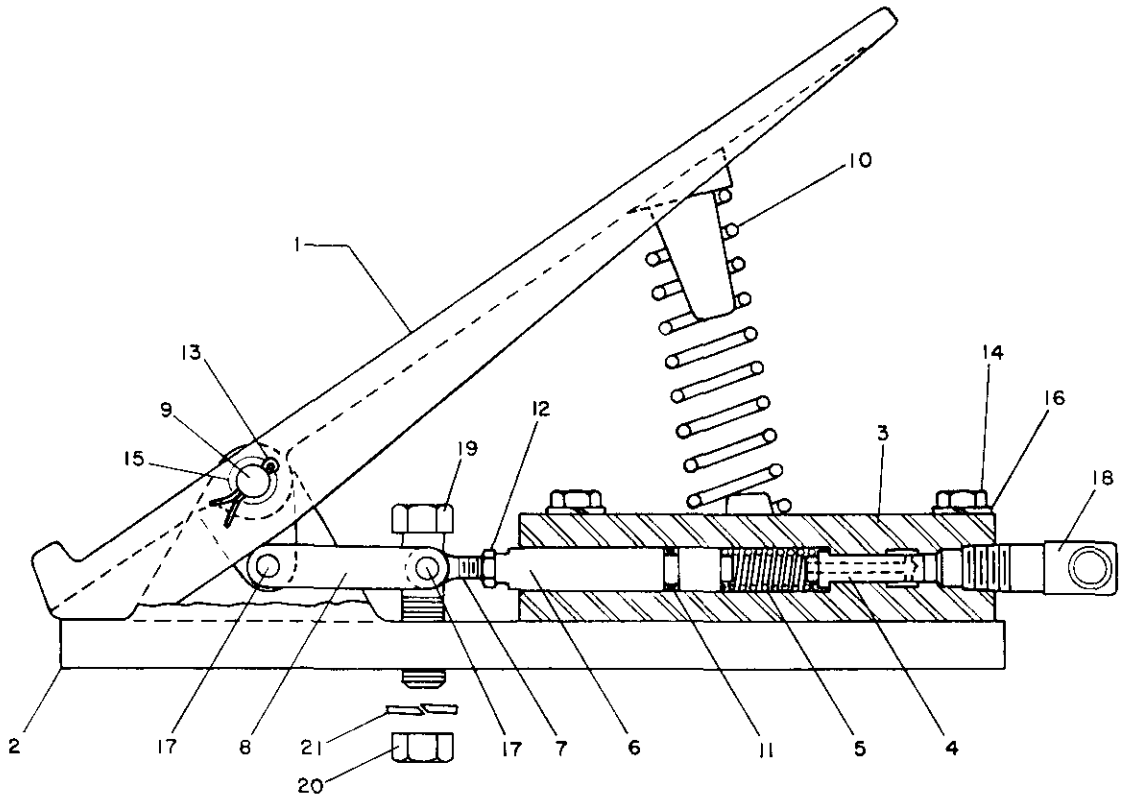


LT-160140

| Item No. | Part No. | Description | No. Req'd. |
|---|---|---|---|
| 1 | 1600647 | PEDAL, Brake | 1 |
| 2 | 1600648 | BASE | 1 |
| 3 | 1600649 | BODY, Brake Valve | 1 |
| 4 | 1600650 | PISTON, Valve | 1 |
| 5 | 1600651 | SPRING, Valve | 1 |
| 6 | 1600652 | PLUNGER, Valve | 1 |
| 7 | 1600653 | END, Brake Rod | 1 |
| 8 | 1600654 | LINK, Pedal/Valve | 2 |
| 9 | 1600656 | PIN | 1 |
| 10 | 1600661 | SPRING, Pedal | 1 |
| 11 | 2410022-012 | PACKING, O-Ring | 1 |
| 12 | 6320040 | NUT, 1/4"-28 Hex Jam, Cadmium Plated | 1 |
| 13 | 6500808 | PIN, Cotter, 1/8" x 1" | 2 |
| 14 | 7000160-11 | SCREW, Hex Head Cap, 5/16" x 1-3/4", Grade 5, Cadmium Plated | 4 |
| 15 | 7621024 | WASHER, 3/8" Type A Narrow, 0.812" O.D., Cadmium Plated | 2 |
| 16 | 7619037 | WASHER, 5/16" Regular Spring Lock, Cadmium Plated | 4 |
| 17 | 7800042 | PIN, Yoke (Complete with Cotter Pin) | 2 |
| *18 | 7804168 | ELBOW, Weatherhead #C5405 x 8 | 2 |
| *19 | 7000304-11 | SCREW, Hex Head Cap, 1/2" x 1-1/4", Grade 5, Cadmium Plated | 2 |
| *20 | 6300081 | NUT, 1/2" Hex, Cadmium Plated | 2 |
| *21 | 7619050 | WASHER, 1/2" Regular Spring Lock, Cadmium Plated | 2 |

*NOTE: Items 18, 19, 20 and 21 are not included in assembly part no. 1600657.

## AIR VALVE PANEL (G-1614620)

NOT APPLICABLE
TO THIS ORDER

SEE DRAWING 1612007-603

.....IN APPENDIX

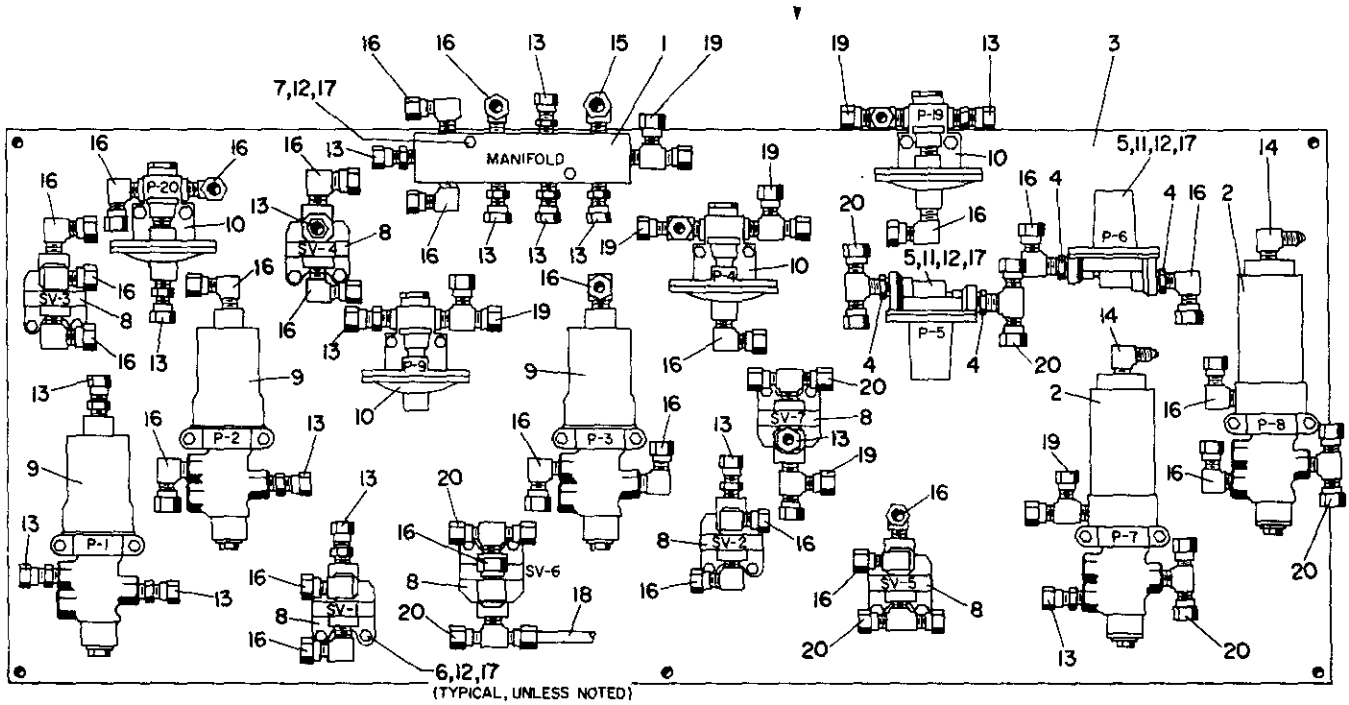


LT-160323

## AIR VALVE PANEL (G-1614620)

| Item No. | Part No. | Description | No. Req'd. |
|---|---|---|---|
| 1 | 1607668 | MANIFOLD, Air | 1 |
| 2 | 1607659 | VALVE, Low Charge Pressure Brake Set, Includes:<br>4—7815238 PACKING, O-Ring (Spool Seal)<br>1—2410022-220 PACKING, O-Ring (Piston Seal) | 2 |
| 3 | G-1613659 | PANEL, Valve Mounting | 1 |
| 4 | 6800031 | BUSHING, Standard M.I. Hex, 3/8" x 1/4" | 4 |
| 5 | 7000105-11 | SCREW, Hex Head Cap, 1/4" x 5/8", Grade 5, Cadmium Plated | 4 |
| 6 | 7000108-11 | SCREW, Hex Head Cap, 1/4" x 1", Grade 5, Cadmium Plated | 32 |
| 7 | 7000111-11 | SCREW, Hex Head Cap, 1/4" x 1-3/4", Grade 5, Cadmium Plated | 2 |
| 8 | 7500017 | VALVE, Shuttle | 7 |
| 9 | 7500115 | VALVE, Includes:<br>4—7815238 PACKING, O-Ring (Spool Seal) | 3 |
| *10 | 7500142 | VALVE | 4 |
| 11 | G-7500338 | VALVE | 2 |
| 12 | 7619033 | WASHER, 1/4" Regular Spring Lock, Cadmium Plated | 38 |
| 13 | 7802478 | CONNECTOR, Weatherhead #1468 x 4 x 4K | 17 |
| 14 | 7804117 | ELBOW, Weatherhead #C5405 x 4 x 4 | 2 |
| 15 | 7804219 | ELBOW, Weatherhead #1469 x 6K | 1 |
| 16 | 7804223 | ELBOW, Weatherhead #1469 x 4 x 4K | 28 |
| 17 | 7817185 | RIVNUT, 1/4" | 38 |
| 18 | 7819106-0 | TUBING, 1/4" Synflex | As Req'd. |
| 19 | 7819142 | TEE, Parker-Hannifin #271 NTA-4-4 | 7 |
| 20 | 7819145 | TEE, Parker-Hannifin #272 NTA-4-4 | 8 |

*NOTE: Rebuild kit may be purchased per part no. 1617299 KIT, 7500142 Valve Repair.

NOT APPLICABLE
TO THIS ORDER

SEE DRAWING 1612007-603

.....IN APPENDIX

## FRONT WINDSHIELD WIPER

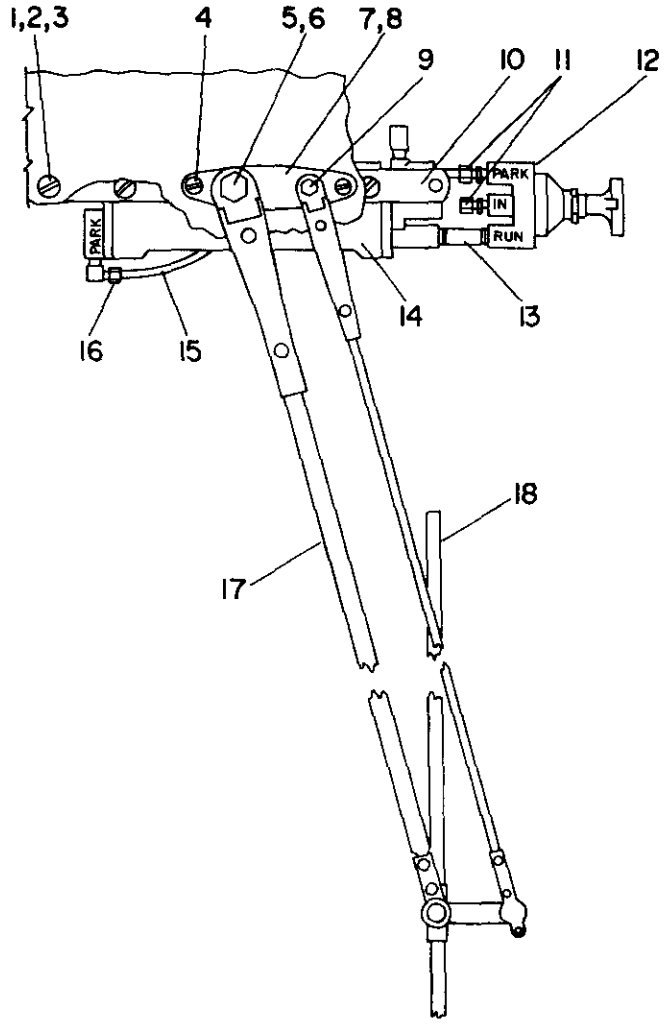


LT-160231

| Item No. | Part No. | Description | No. Req'd. |
|---|---|---|---|
| 1 | 6300001 | NUT, #10-24 Hex, Cadmium Plated | 2 |
| 2 | 7053092-13 | SCREW, Pan Head Machine, #10 x 3/4", Nickel Plated | 2 |
| 3 | 7619025 | WASHER, Regular Spring Lock, #10, Cadmium Plated | 2 |
| 4 | 7051079-01 | SCREW, Round Head Machine, #8-32 x 3/4", Cadmium Plated | 2 |
| 5 | G-7800023-002 | DRIVER, Wiper Arm | 1 |
| 6 | G-7818350-002 | SHAFT, Medium | 1 |
| 7 | G-7800023-003 | GASKET, Wiper Mounting | 1 |
| 8 | G-7800023-005 | SPACER, Wiper Arm Mounting | 1 |
| 9 | G-7800023-004 | NUT, Wiper Arm | 1 |
| 10 | G-7815244-002 | PLATE | 1 |
| 11 | 7802477 | CONNECTOR, Weatherhead #1468 x 4K | 2 |
| 12 | G-7812050-002 | VALVE, Wiper Motor | 1 |
| 13 | 6817001 | NIPPLE, Standard Pipe, 1/8" x 1" | 1 |
| 14 | G-7812050-001 | MOTOR, Wiper Air, 85° Sweep | 1 |
| 15 | 7819106-0 | TUBING, 1/4" Synflex | As Req'd. |
| 16 | 7804220 | ELBOW, Weatherhead #1469 x 4K | 1 |
| 17 | G-7800023-001 | ARM, 21-1/2" | 1 |
| 18 | G-7801173 | BLADE, 22" | 1 |

## COLLECTOR RING AND ROTORSEAL (G-1613658)

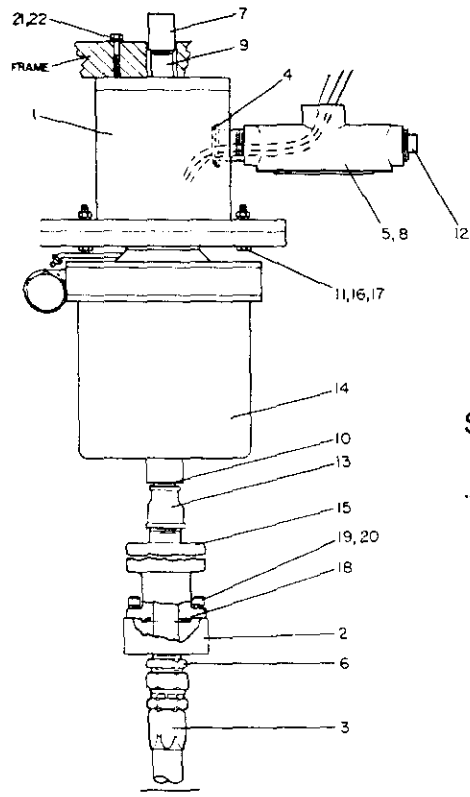


NOT APPLICABLE
TO THIS ORDER

SEE DRAWING 1612009-805
IN APPENDIX

LT-160156

| Item No. | Part No. | Description | No. Req'd. |
|---|---|---|---|
| 1 | G-1613657 | ADAPTER, Collector Ring | 1 |
| 2 | X16-1339 | FLANGE, Air Line | 1 |
| 3 | 2400066-15 | ASSEMBLY, Hose, Consisting of: | 1 |
| | | 21-5/8"—6100036 HOSE, Aeroquip #2651-16 | |
| | | 2—7805083 FITTING, Aeroquip #4411-16S | |
| 4 | 7801162 | BUSHING, Conduit, Esco #124-1" | 1 |
| 5 | 7802412 | CONDULET, Crouse-Hinds #TB-39 with Cover | 1 |
| 6 | 7802362 | CONNECTOR, Weatherhead #C5205-16 | 1 |
| 7 | 6806004 | COUPLING, 1/2" Standard Pipe | 1 |
| 8 | 7806053 | GASKET, Esco #GASK-1943-1" | 1 |
| 9 | 6817056 | NIPPLE, Standard Pipe, 1/2" x 6" | 1 |
| 10 | 6817044-G | NIPPLE, Standard Pipe, 1/2" x Close, Galvanized | 1 |
| 11 | 6300041 | NUT, 1/4" Hex, Cadmium Plated | 4 |
| 12 | 6874008 | PLUG, 1" Standard Square Head Pipe | 1 |
| 13 | 6884024 | REDUCER, Standard Pipe, 1" x 1/2" | 1 |
| 14 | 7817031 | RING, Collector (Electrical Slip-Ring Assembly) | 1 |
| 15 | 7817084 | ROTORSEAL | 1 |
| 16 | 7000111-11 | SCREW, Hex Head Cap, 1/4" x 1-3/4", Grade 5, Cadmium Plated | 4 |
| 17 | 7619033 | WASHER, 1/4" Regular Spring Lock, Cadmium Plated | 4 |
| *18 | 2410022-222 | PACKING, O-Ring | 1 |
| *19 | 7006208 | SCREW, Hex Socket Head Cap, 3/8" x 1" | 4 |
| *20 | 7612014 | WASHER, 3/8" High Collar Spring Lock | 4 |
| 21 | 7000212-11 | SCREW, Hex Head Cap, 3/8" x 2", Grade 5, Cadmium Plated | 4 |
| 22 | 7619041 | WASHER, 3/8" Regular Spring Lock, Cadmium Plated | 4 |

*NOTE: Items 18, 19 and 20 are not included with Item 15, Part No. 7817084 ROTORSEAL

## MISCELLANEOUS AIR PIPING—LARGE AIR RECEIVER

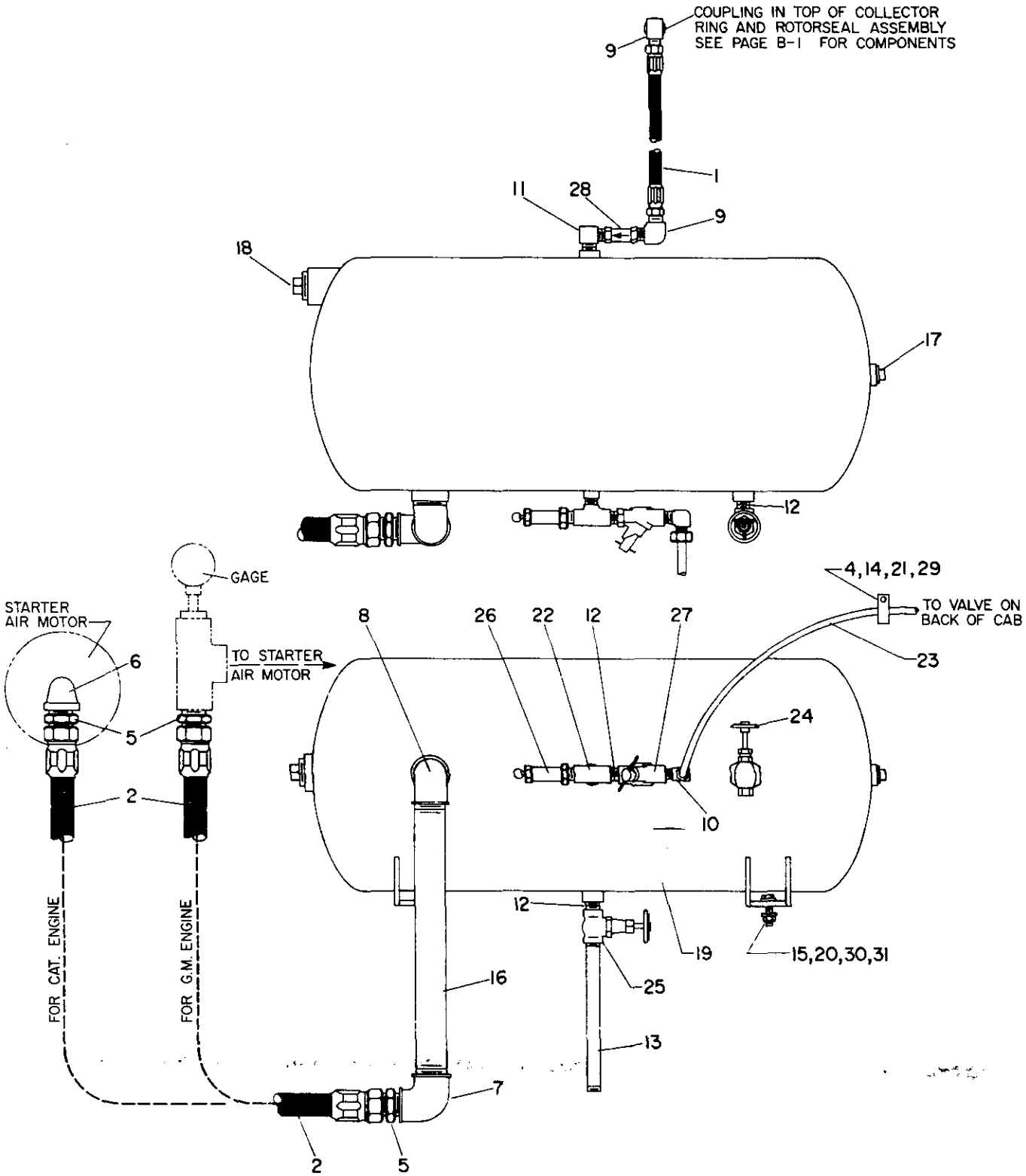


LT-160159

## MISCELLANEOUS AIR PIPING—CAB REAR WALL

| Item No. | Part No. | Description | No. Req'd. |
|---|---|---|---|
| 1 | 6800062-G | BUSHING, Standard M.I. Hex, 3/4" x 1/2", Galvanized | 5 |
| 2 | G-6800069-G | BUSHING, Standard M.I. Hex, 3/4" x 1/8", Galvanized | 1 |
| 3 | G-6800083-G | BUSHING, Standard M.I. Hex, 1" x 1/2", Galvanized | 1 |
| 4 | 7802296 | CONNECTOR, Weatherhead #C5205 x 4 x 4 | 6 |
| 5 | 7802306 | CONNECTOR, Weatherhead #7205 x 4 | 2 |
| 6 | 7802388 | CONNECTOR, Weatherhead #1468 x 6K | 1 |
| 7 | 7802477 | CONNECTOR, Weatherhead #1468 x 4K | 2 |
| 8 | 7802478 | CONNECTOR, Weatherhead #1468 x 4 x 4K | 36 |
| 9 | 7802480 | CONNECTOR, Weatherhead #1468 x 6 x 8K | 1 |
| 10 | 7803030 | DRYER | 1 |
| 11 | 7804139 | ELBOW, Weatherhead #7405 x 4 x 4 | 2 |
| 12 | 7804219 | ELBOW, Weatherhead #1469 x 6K | 2 |
| 13 | 7804223 | ELBOW, Weatherhead #1469 x 4 x 4K | 1 |
| 14 | 7804227 | ELBOW, Weatherhead #1469 x 6 x 8K | 3 |
| 15 | 7806060 | GAGE, 0-200 PSI, Air | 1 |
| 16 | 7807057 | HORN, Air | 1 |
| 17 | 7811069 | LUBRICATOR, 1/2" Norgren | 1 |
| 18 | 6817044-G | NIPPLE, Standard Pipe, 1/2" x Close, Galvanized | 1 |
| 19 | 6820057 | NIPPLE, Extra Strong Pipe, 1/2" x Close | 3 |
| 20 | 6300041 | NUT, 1/4" Hex, Cadmium Plated | 3 |
| 21 | 6300051 | NUT, 5/16" Hex, Cadmium Plated | 2 |
| 22 | 6300062 | NUT, 3/8" Hex, Cadmium Plated | 4 |
| 23 | 6875002 | PLUG, 1/4" Standard Countersunk Pipe | 4 |
| 24 | 6875004 | PLUG, 1/2" Standard Countersunk Pipe | 2 |
| 25 | 7817169 | RECEIVER, Air | 1 |
| 26 | 7000108-11 | SCREW, Hex Head Cap, 1/4" x 1", Grade 5, Cadmium Plated | 3 |
| 27 | 7000157-11 | SCREW, Hex Head Cap, 5/16" x 1", Grade 5, Cadmium Plated | 2 |
| 28 | 7000208-11 | SCREW, Hex Head Cap, 3/8" x 1", Grade 5, Cadmium Plated | 4 |
| 29 | 7819142 | TEE, Parker-Hannifin #271 NTA-4-4 | 3 |
| 30 | 7819143 | TEE, Weatherhead #1471 x 6K | 1 |
| 31 | 7819106-0 | TUBING, 1/4" Synflex | As Req'd. |
| 32 | 7819107-0 | TUBING, 3/8" Snyflex | As Req'd. |
| 33 | 7500088 | VALVE, 1/2" Screwed Angle Globe | 2 |
| 34 | 7500143 | VALVE, Cylinder Operated | 1 |
| 35 | 7500149 | VALVE, 1/2" Safety Relief | 1 |
| 36 | G-7500346 | VALVE, 1/2" Check | 1 |
| 37 | 7619033 | WASHER, 1/4" Regular Spring Lock, Cadmium Plated | 3 |
| 38 | 7619037 | WASHER, 5/16" Regular Spring Lock, Cadmium Plated | 2 |
| 39 | 7619041 | WASHER, 3/8" Regular Spring Lock, Cadmium Plated | 4 |
| 40 | 6829001 | ELBOW, Standard M.I. Street, 1/8" x 90° | 1 |

## MISCELLANEOUS ELECTRICAL EQUIPMENT AND CONDUIT FOR CRANES WITH CATERPILLAR ENGINES (120 and 240 VOLT)

NOT APPLICABLE
TO THIS ORDER

SEE DRAWING 1612009-800

_____ IN APPENDIX

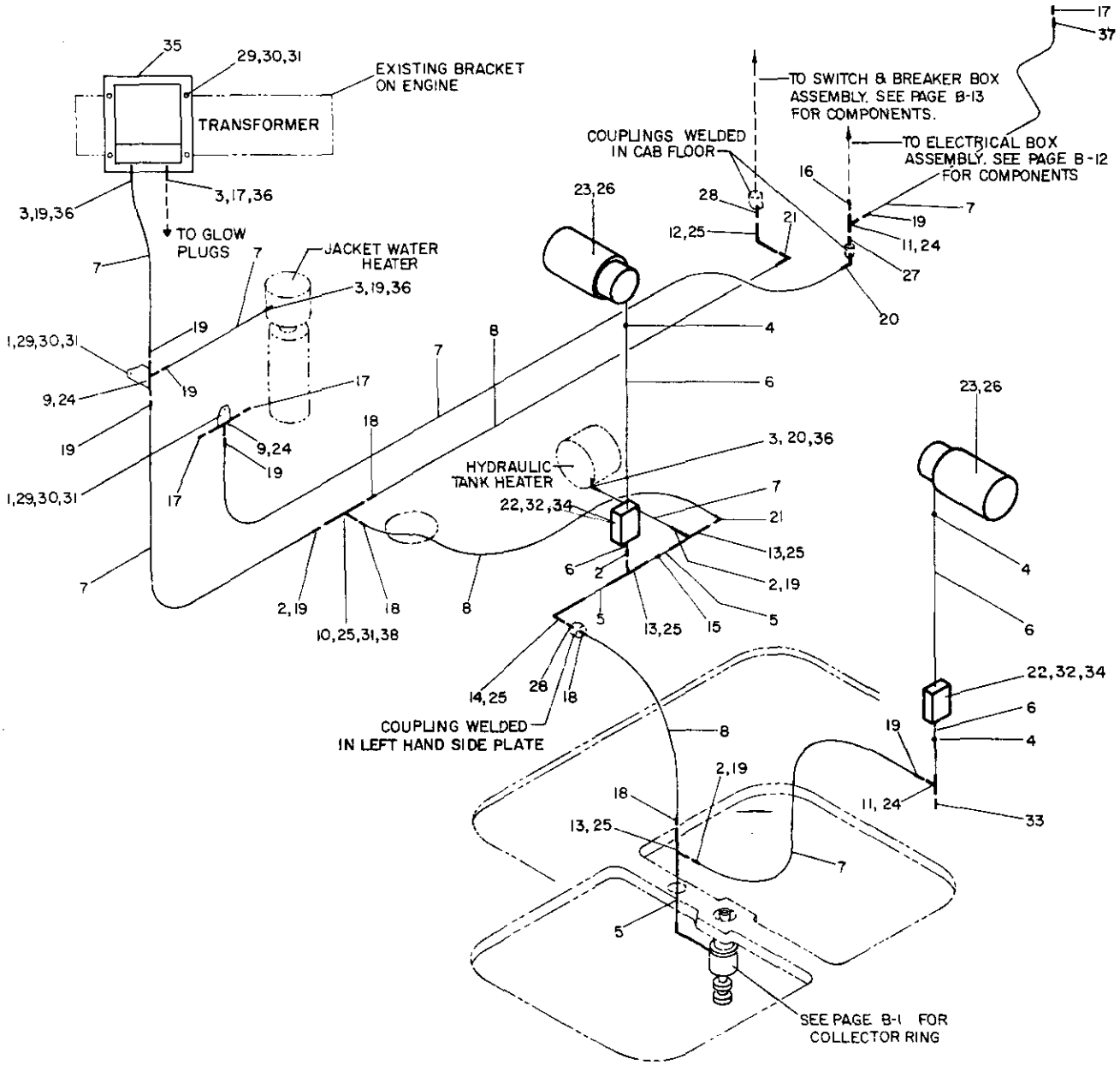


LT-160054



ARMCO National Supply Company
Division of Armco

## MISCELLANEOUS ELECTRICAL EQUIPMENT AND CONDUIT FOR CRANES WITH CATERPILLAR ENGINES (120 and 240 VOLT)

| Item No. | Part No. | Description | No. Req'd. |
|---|---|---|---|
| 1 | 1617859 | BRACKET | 2 |
| 2 | G-6800083-G | BUSHING, Hex Pipe, 1" x 1/2", Galvanized | 4 |
| 3 | 7801151 | BUSHING, Conduit, Esco #122-1/2" | 4 |
| 4 | 7802352 | CLAMP, Hydra-Zorb #200050 | 3 |
| 5 | 7802142 | CONDUIT, 1" Rigid Aluminum | As Req'd. |
| 6 | 7802145 | CONDUIT, 1/2" Rigid Aluminum | As Req'd. |
| 7 | 7802404 | CONDUIT, 1/2" Flexible Liquid Tight | As Req'd. |
| 8 | G-7802434 | CONDUIT, 1" Flexible Liquid Tight | As Req'd. |
| 9 | 1617664 | CONDULET, Drilled, #T-19, With Cover | 2 |
| 10 | 1617666 | CONDULET, Drilled, #T-39, With Cover | 1 |
| 11 | 7802149 | CONDULET, Crouse-Hinds #T-19, With Cover | 2 |
| 12 | 7802154 | CONDULET, Crouse-Hinds #LR-39, With Cover | 1 |
| 13 | 7802155 | CONDULET, Crouse-Hinds #T-39, With Cover | 3 |
| 14 | 7802411 | CONDULET, Crouse-Hinds #LB-39, With Cover | 1 |
| 15 | G-7802466 | CLAMP, Hydra-Zorb #200100 | 1 |
| 16 | 7802235 | CONNECTOR, Crouse-Hinds #CGB-194 | 1 |
| 17 | 7802236 | CONNECTOR, Crouse-Hinds #CGB-192 | 4 |
| 18 | 7802385 | CONNECTOR, Esco #5234, 1" x Straight | 4 |
| 19 | 7802400 | CONNECTOR, Esco #5232, 1/2" x Straight | 10 |
| 20 | 7802418 | CONNECTOR, Esco #5252, 1/2" x 90° | 2 |
| 21 | G-7802488 | CONNECTOR, Esco #5254, 1" x 90° | 2 |
| 22 | 7805119 | FITTING, Receptacle | 2 |
| 23 | 7805157 | FIXTURE, Wesco #V12009, Vapor Tight Light | 2 |
| 24 | 7806051 | GASKET, Esco #GASK-1941-1/2" | 4 |
| 25 | 7806053 | GASKET, Esco #GASK-1943-1" | 6 |
| 26 | 7811001 | LAMP, Wesco 150 A/RS 130 V (For 120 V. Cranes) | 2 |
| | 7811008 | LAMP, Wesco 100 A/RS 230 V (For 240 V. Cranes) | 2 |
| 27 | 6817044-G | NIPPLE, Standard Pipe, 1/2" x Close, Galvanized | 1 |
| 28 | 6817073-G | NIPPLE, Standard Pipe, 1" x Close, Galvanized | 2 |
| 29 | 6300041 | NUT, 1/4" Hex, Cadmium Plated | 8 |
| 30 | 7000105-11 | SCREW, Hex Head Cap, 1/4" x 5/8", Grade 5, Cadmium Plated | 8 |
| 31 | 7619033 | WASHER, 1/4" Regular Spring Lock, Cadmium Plated | 10 |
| 32 | G-7817004 | RECEPTACLE, Hubbell #5262 Duplex (For 120 V. Cranes) | 2 |
| | G-7817183 | RECEPTACLE, Hubbell #5662 Duplex (For 240 V. Cranes) | 2 |
| 33 | 6874004 | PLUG, 1/2" Standard Square Head Pipe | 1 |
| 34 | 7802177 | COVER, Outlet | 2 |
| 35 | 7819036 | TRANSFORMER | 1 |
| 36 | 7813045 | NUT, 1/2" Conduit Lock | 4 |
| 37 | 7802405 | CONNECTOR, Esco #4Q50 FM | 1 |
| 38 | 7000102-11 | SCREW, Hex Head Cap, 1/4" x 3/8", Grade 5, Cadmium Plated | 2 |

SEE DRAWING 1612009-800

IN APPENDIX

## MISCELLANEOUS ELECTRICAL EQUIPMENT AND CONDUIT FOR CRANES WITH G.M. ENGINES (120 VOLTS)

NOT APPLICABLE
TO THIS ORDER

SEE DRAWING NONE

.....IN APPENDIX

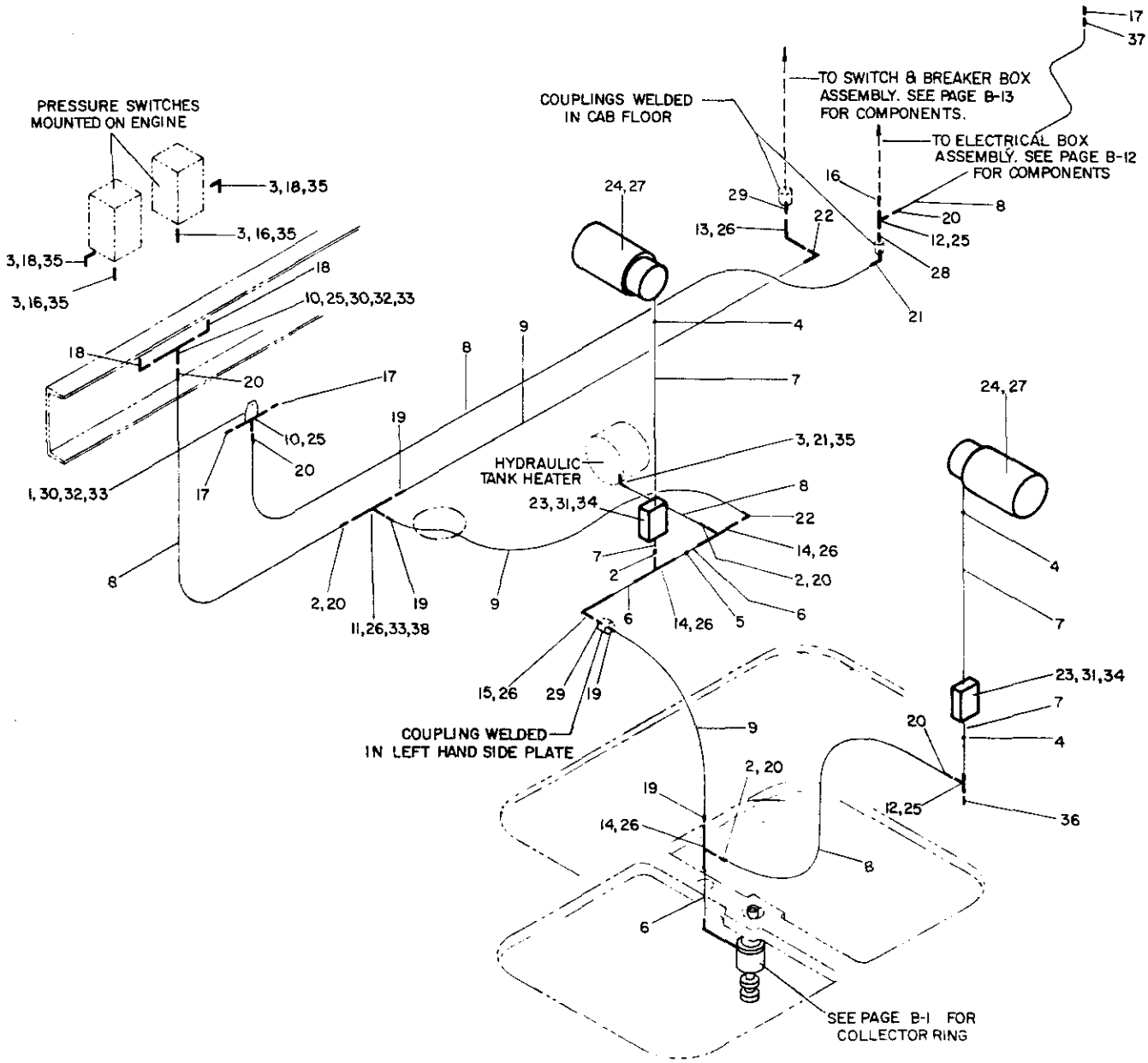


LT-160053



ARMCO National Supply Company
Division of Armco

## MISCELLANEOUS ELECTRICAL EQUIPMENT AND CONDUIT FOR CRANES WITH G.M. ENGINES (120 VOLTS)

| Item No. | Part No. | Description | No. Req'd. |
|---|---|---|---|
| 1 | 1617859 | BRACKET | 1 |
| 2 | G-6800083-G | BUSHING, Hex Pipe, 1" x 1/2", Galvanized | 4 |
| 3 | 7801151 | BUSHING, Conduit, Esco #122-1/2" | 5 |
| 4 | 7802352 | CLAMP, Hydra-Zorb #200050 | 3 |
| 5 | G-7802466 | CLAMP, Hydra-Zorb #200100 | 1 |
| 6 | 7802142 | CONDUIT, 1" Rigid Aluminum | As Req'd. |
| 7 | 7802145 | CONDUIT, 1/2" Rigid Aluminum | As Req'd. |
| 8 | 7802404 | CONDUIT, 1/2" Flexible Liquid Tight | As Req'd. |
| 9 | G-7802434 | CONDUIT, 1" Flexible Liquid Tight | As Req'd. |
| 10 | 1617664 | CONDULET, Drilled #T-19, With Cover | 2 |
| 11 | 1617666 | CONDULET, Drilled #T-39, With Cover | 1 |
| 12 | 7802149 | CONDULET, Crouse-Hinds #T-19, With Cover | 2 |
| 13 | 7802154 | CONDULET, Crouse-Hinds #LR-39, With Cover | 1 |
| 14 | 7802155 | CONDULET, Crouse-Hinds #T-39, With Cover | 3 |
| 15 | 7802411 | CONDULET, Crouse-Hinds #LB-39, With Cover | 1 |
| 16 | 7802235 | CONNECTOR, Crouse-Hinds #CGB-194 | 3 |
| 17 | 7802236 | CONNECTOR, Crouse-Hinds #CGB-192 | 3 |
| 18 | G-7802491 | CONNECTOR, Crouse-Hinds #CGE-194 | 4 |
| 19 | 7802385 | CONNECTOR, Esco #5234, 1" x Straight | 4 |
| 20 | 7802400 | CONNECTOR, Esco #5232, 1/2" x Straight | 7 |
| 21 | 7802418 | CONNECTOR, Esco #5252, 1/2" x 90° | 2 |
| 22 | G-7802488 | CONNECTOR, Esco #5254, 1" x 90° | 2 |
| 23 | 7805119 | FITTING, Receptacle | 2 |
| 24 | 7805157 | FIXTURE, Wesco #V12009, Vapor Tight Light | 2 |
| 25 | 7806051 | GASKET, Esco #GASK-1941-1/2" | 4 |
| 26 | 7806053 | GASKET, Esco #GASK-1943-1" | 6 |
| 27 | 7811001 | LAMP, Wesco #150 A/RS 130 V | 2 |
| 28 | 6817044-G | NIPPLE, Standard Pipe, 1/2" x Close, Galvanized | 1 |
| 29 | 6817073-G | NIPPLE, Standard Pipe, 1" x Close, Galvanized | 2 |
| 30 | 6300041 | NUT, 1/4" Hex, Cadmium Plated | 4 |
| 31 | G-7817004 | RECEPTACLE, Hubbell #5262 Duplex (120 Volt) | 2 |
| 32 | 7000105-11 | SCREW, Hex Head Cap, 1/4" x 5/8", Grade 5, Cadmium Plated | 4 |
| 33 | 7619033 | WASHER, 1/4" Regular Spring Lock, Cadmium Plated | 6 |
| 34 | 7802177 | COVER, Outlet | 2 |
| 35 | 7813045 | NUT, 1/2" Conduit Lock | 5 |
| 36 | 6874004 | PLUG, 1/2" Standard Solid Square Head Pipe | 1 |
| 37 | 7802405 | CONNECTOR, Esco #4Q50 FM | 1 |
| 38 | 7000102-11 | SCREW, Hex Head Cap, 1/4" x 3/8", Grade 5, Cadmium Plated | 2 |

NOT APPLICABLE
TO THIS ORDER

SEE DRAWING NONE

IN APPENDIX

## MISCELLANEOUS ELECTRICAL EQUIPMENT AND CONDUIT FOR CRANES WITH G.M. ENGINES (240 VOLT)

NOT APPLICABLE
TO THIS ORDER

SEE DRAWING NONE

IN APPENDIX

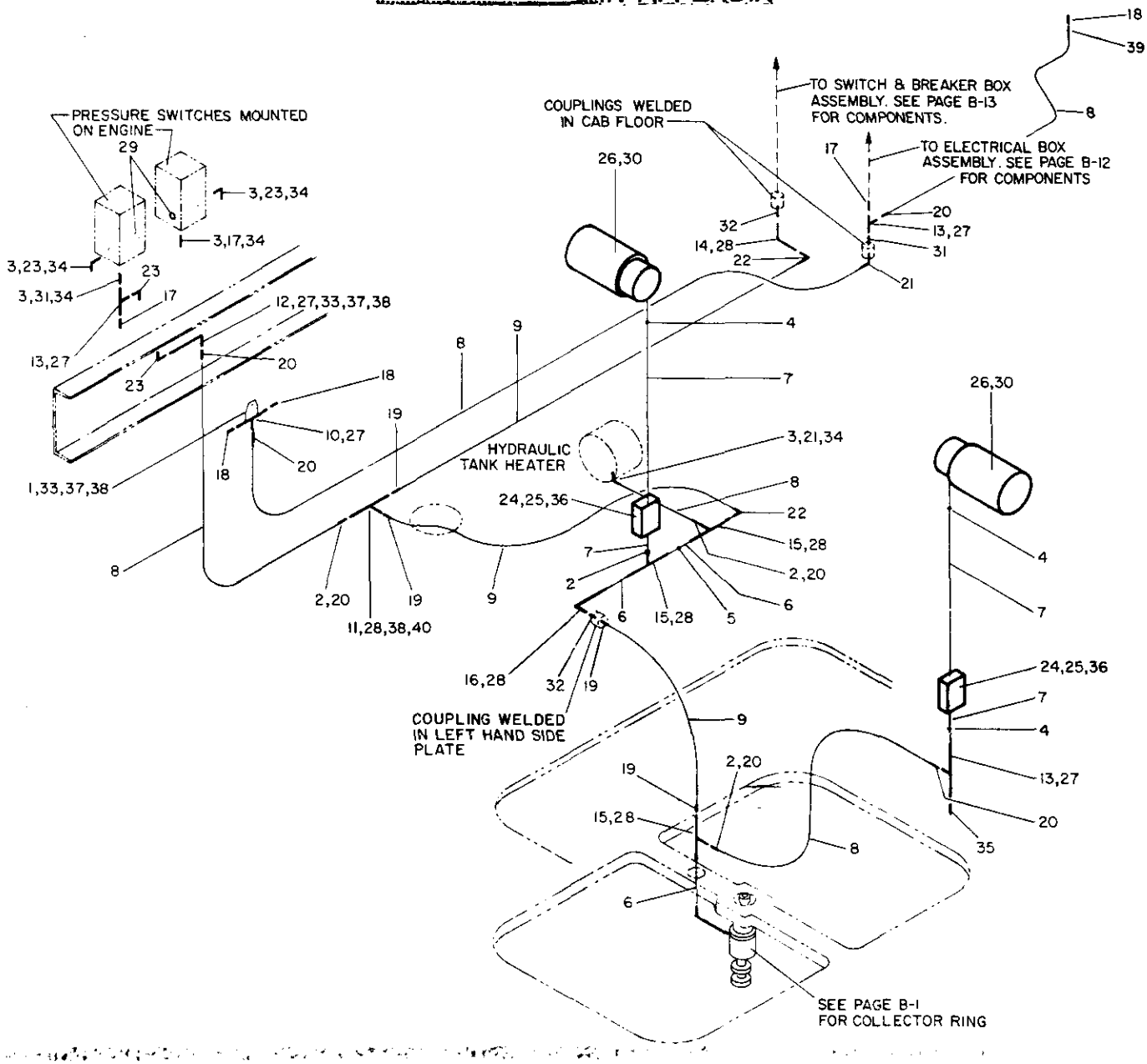


LT-160052

## MISCELLANEOUS ELECTRICAL EQUIPMENT AND CONDUIT FOR CRANES WITH G.M. ENGINES (240 VOLTS)

| Item No. | Part No. | Description | No. Req'd. |
|---|---|---|---|
| 1 | 1617859 | BRACKET | 1 |
| 2 | G-6800083-G | BUSHING, Hex Pipe, 1" x 1/2", Galvanized | 4 |
| 3 | 7801151 | BUSHING, Conduit, Esco #122-1/2" | 5 |
| 4 | 7802352 | CLAMP, Hydra-Zorb #200050 | 3 |
| 5 | G-7802466 | CLAMP, Hydra-Zorb #200100 | 1 |
| 6 | 7802142 | CONDUIT, 1" Rigid Aluminum | As Req'd. |
| 7 | 7802145 | CONDUIT, 1/2" Rigid Aluminum | As Req'd. |
| 8 | 7802404 | CONDUIT, 1/2" Flexible Liquid Tight | As Req'd. |
| 9 | G-7802434 | CONDUIT, 1" Flexible Liquid Tight | As Req'd. |
| 10 | 1617664 | CONDULET, Drilled #T-19, With Cover | 1 |
| 11 | 1617666 | CONDULET, Drilled #T-39, With Cover | 1 |
| 12 | 7802148 | CONDULET, Crouse-Hinds #LR-19, With Cover | 1 |
| 13 | 7802149 | CONDULET, Crouse-Hinds #T-19, With Cover | 3 |
| 14 | 7802154 | CONDULET, Crouse-Hinds #LR-39, With Cover | 1 |
| 15 | 7802155 | CONDULET, Crouse-Hinds #T-39, With Cover | 3 |
| 16 | 7802411 | CONDULET, Crouse-Hinds #LB-39, With Cover | 1 |
| 17 | 7802235 | CONNECTOR, Crouse-Hinds #CGB-194 | 3 |
| 18 | 7802236 | CONNECTOR, Crouse-Hinds #CGB-192 | 3 |
| 19 | 7802385 | CONNECTOR, Esco #5234, 1" x Straight | 4 |
| 20 | 7802400 | CONNECTOR, Esco #5232, 1/2" x Straight | 7 |
| 21 | 7802418 | CONNECTOR, Esco #5252, 1/2" x 90° | 2 |
| 22 | G-7802488 | CONNECTOR, Esco #5254, 1" x 90° | 2 |
| 23 | G-7802491 | CONNECTOR, Crouse-Hinds #CGE-194 | 4 |
| 24 | 7802177 | COVER, Outlet | 2 |
| 25 | 7805119 | FITTING, Receptacle | 2 |
| 26 | 7805157 | FIXTURE, Wesco #12009 Vapor Tight Light | 2 |
| 27 | 7806051 | GASKET, Esco #GASK-1941-1/2" | 5 |
| 28 | 7806053 | GASKET, Esco #GASK-1943-1" | 6 |
| 29 | 7806045 | GROMMET | 2 |
| 30 | 7811008 | LAMP, Wesco #100 A/RS 230 V | 2 |
| 31 | 6817044-G | NIPPLE, Standard Pipe, 1/2" x Close, Galvanized | 2 |
| 32 | 6817073-G | NIPPLE, Standard Pipe, 1" x Close, Galvanized | 2 |
| 33 | 6300041 | NUT, 1/4" Hex, Cadmium Plated | 4 |
| 34 | 7813045 | NUT, 1/2" Conduit Lock | 6 |
| 35 | 6874004 | PLUG, 1/2" Standard Square Head Pipe | 1 |
| 36 | G-7817183 | RECEPTACLE, Hubbell #5662 Duplex (240 Volt) | 2 |
| 37 | 7000105-11 | SCREW, Hex Head Cap, 1/4" x 5/8", Grade 5, Cadmium Plated | 4 |
| 38 | 7619033 | WASHER, 1/4" Regular Spring Lock, Cadmium Plated | 6 |
| 39 | 7802405 | CONNECTOR, Esco #4Q50 FM | 1 |
| 40 | 7000102-11 | SCREW, Hex Head Cap, 1/4" x 3/8", Grade 5, Cadmium Plated | 2 |

NOT APPLICABLE
TO THIS ORDER

SEE DRAWING NONE

IN APPENDIX

## ELECTRICAL BOX ASSEMBLY

NOT APPLICABLE TO THIS ORDER

SEE DRAWING 1612009-806 IN APPENDIX

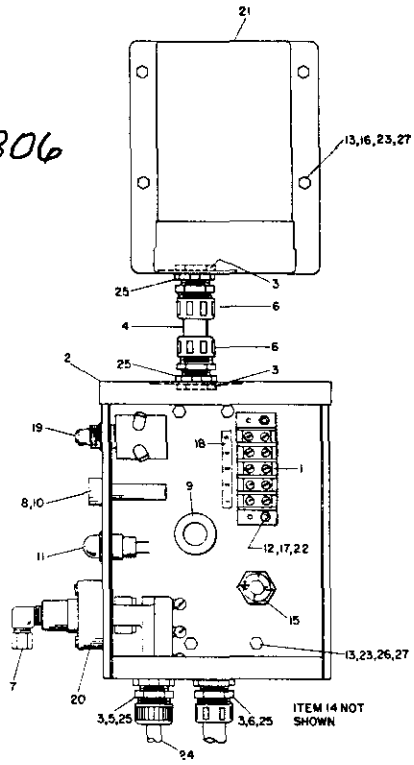


LT-160128

| Item No. | Part No. | Description | No. Req'd. |
|---|---|---|---|
| 1 | 7801053 | BLOCK, Barrier | 1 |
| 2 | 1617668 | BOX, Electric | 1 |
| 3 | 7801151 | BUSHING, Conduit, Esco #122-1/2" | 4 |
| 4 | 7802404 | CONDUIT, 1/2" Flexible Liquid Tight | As Req'd. |
| 5 | 7802235 | CONNECTOR, Crouse-Hinds #CGB-194 | 1 |
| 6 | 7802400 | CONNECTOR, Esco #5232, 1/2" x Straight | 3 |
| 7 | 7804223 | ELBOW, Weatherhead #1469 x 4 x 4K | 1 |
| 8 | 7805034 | FUSE, 5 Amp. | 1 |
| 9 | 7806045 | GROMMET | 1 |
| 10 | 7807028 | HOLDER, Fuse | 1 |
| 11 | 7811037 | LIGHT, Pilot, Includes: 1—7801128 BULB, Pilot Light | 1 |
| 12 | 6300004 | NUT, #6-32 Hex, Brass | 2 |
| 13 | 6300041 | NUT, 1/4" Hex, Cadmium Plated | 8 |
| 14 | 2407222 | PLATE, Identification (Not Shown) | 1 |
| 15 | 7817023 | RECTIFIER, 25 Amp. | 1 |
| 16 | 7000109-11 | SCREW, Hex Head Cap, 1/4" x 1-1/4", Grade 5, Cadmium Plated | 4 |
| 17 | 7051066-01 | SCREW, Round Head Machine, #6-32 x 1/2", Cadmium Plated | 2 |
| 18 | 7818157 | STRIP, Identification | 1 |
| 19 | 7801142 | SWITCH, Push Button | 1 |
| 20 | 7818215 | SWITCH, Pressure | 1 |
| 21 | 7819037 | TRANSFORMER | 1 |
| 22 | 7619017 | WASHER, #6 Regular Spring Lock, Cadmium Plated | 2 |
| 23 | 7619033 | WASHER, 1/4" Regular Spring Lock, Cadmium Plated | 8 |
| 24 | 7822070 | WIRE, #14-2, Type SO-1 | As Req'd. |
| 25 | 7813045 | NUT, 1/2" Conduit Lock | 4 |
| 26 | 7000108-11 | SCREW, Hex Head Cap, 1/4" x 1", Grade 5, Cadmium Plated | 4 |
| 27 | G-7608061 | WASHER, 1/4" Barseal | 8 |

## SWITCH AND BREAKER BOX ASSEMBLY

NOT APPLICABLE TO THIS ORDER

SEE DRAWING 1612009-810 IN APPENDIX

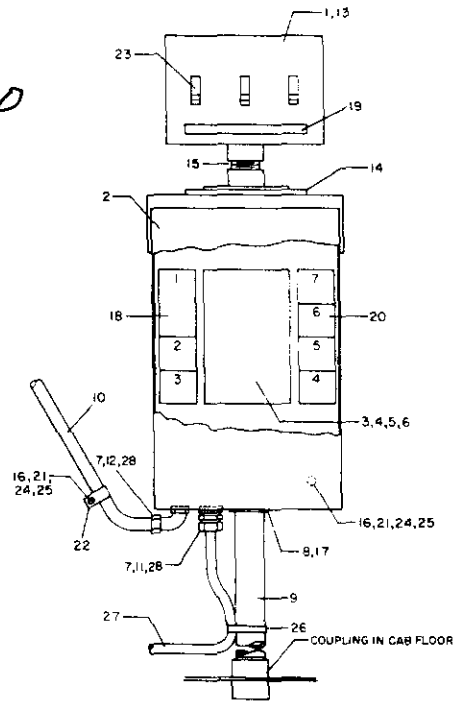


LT-160324

| Item No. | Part No. | Description | No. Req'd. |
|---|---|---|---|
| 1 | G-7801095 | BOX, Switch, Crouse-Hinds #FS-33 | 1 |
| 2 | 7801108 | BOX, Breaker, Square-D #Q08-16RB (With Door) | 1 |
| 3 | 7801098 | BREAKER, Circuit, 15 Amp. Tandem (2 Spaces Required) | As Req'd. |
| 4 | 7801103 | BREAKER, Circuit, 30 Amp. Single (2 Spaces Required) | As Req'd. |
| 5 | 7801117 | BREAKER, Circuit, 20 Amp. Tandem (2 Spaces Required) | As Req'd. |
| 6 | 7801119 | BREAKER, Circuit, 30 Amp. Tandem (2 Spaces Required) | As Req'd. |
| 7 | 7801151 | BUSHING, Conduit, Esco #122-1/2" | 2 |
| 8 | 7801162 | BUSHING, 1" Conduit | 1 |
| 9 | 7802142 | CONDUIT, Rigid, 1" x 26" Long | 1 |
| 10 | 7802404 | CONDUIT, 1/2" Liquid Tight | As Req'd. |
| 11 | 7802235 | CONNECTOR, Crouse-Hinds #CGB-194 | 1 |
| 12 | 7802418 | CONNECTOR, Esco #5252, 1/2" x 90° | 1 |
| 13 | G-7802435 | COVER, Crouse-Hinds #S-323 | 1 |
| 14 | G-7807062 | HUB, Square-D #B-100 | 1 |
| 15 | 6817073-G | NIPPLE, Standard Pipe, 1" x Close, Galvanized | 1 |
| 16 | 6300041 | NUT, 1/4" Hex, Cadmium Plated | 5 |
| 17 | 7813052 | NUT, 1" Conduit Lock | 1 |
| 18 | 2407220 | PLATE, Left-Side Breaker Identification | 1 |
| 19 | G-2407247 | PLATE, Light Switch Identification | 1 |
| 20 | G-2407259 | PLATE, Right-Side Breaker Identification | 1 |
| 21 | 7000108-11 | SCREW, Hex Head Cap, 1/4" x 1", Grade 5, Cadmium Plated | 5 |
| 22 | 7818163 | STRAP, 1/2" Conduit | 2 |
| 23 | 7818298 | SWITCH, Toggle | 3 |
| 24 | G-7608061 | WASHER, 1/4" Barseal | 5 |
| 25 | 7619033 | WASHER, 1/4" Regular Spring Lock, Cadmium Plated | 5 |
| 26 | 7819049 | TYRAP | 2 |
| 27 | 7822070 | WIRE, #14-2, Type SO-1 | As Req'd. |
| 28 | 7813045 | NUT, 1/2" Conduit Lock | 2 |

## CATERPILLAR ENGINE

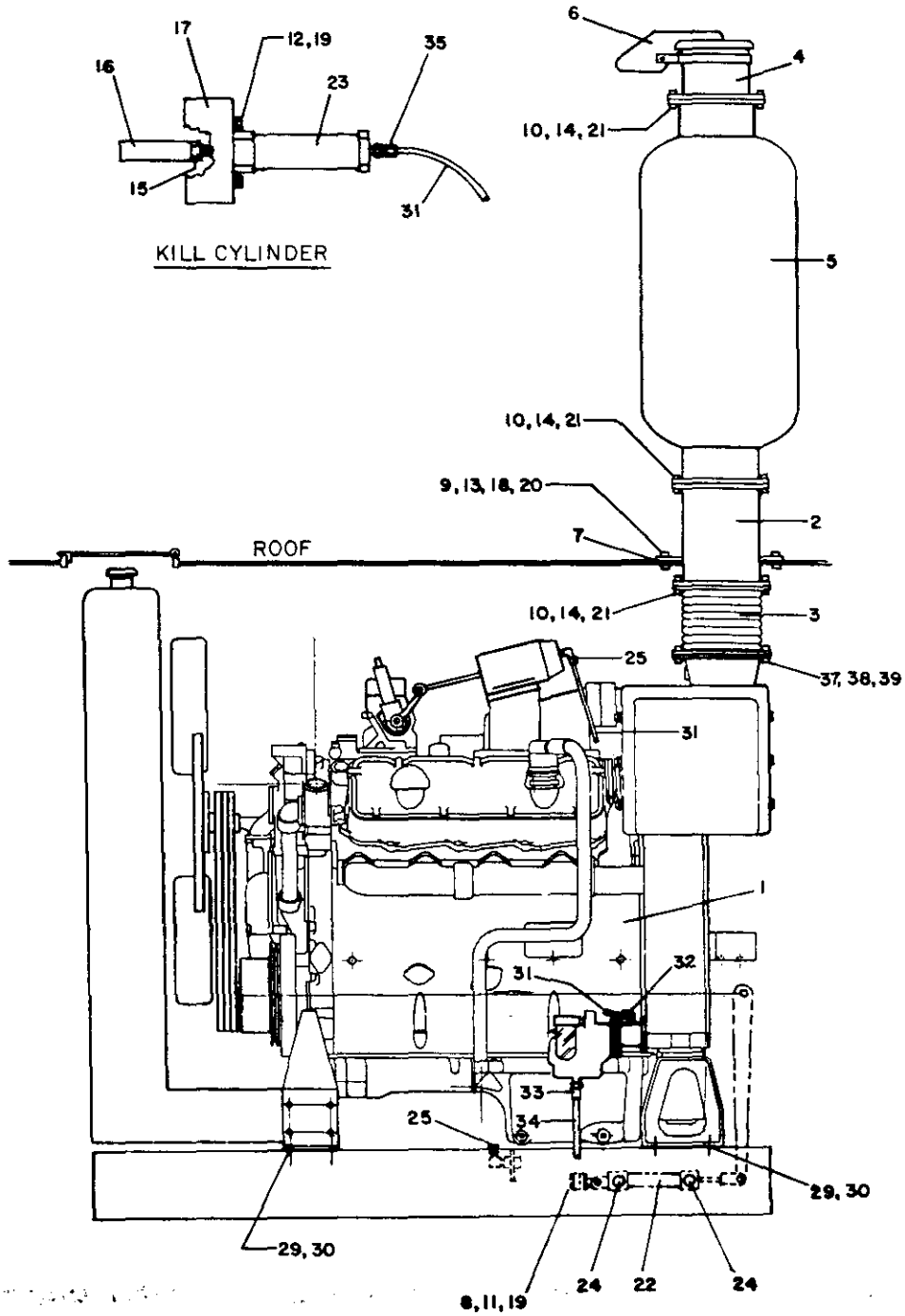


ITEMS 26,27,28 AND 36 ARE NOT SHOWN

LT-160110

## CATERPILLAR ENGINE

| Item No. | Part No. | Description | No. Req'd. |
|---|---|---|---|
| 1 | G-1613933 | ENGINE, Caterpillar 3408 PCTA | 1 |
| 2 | G-1613937 | SUPPORT, Muffler | 1 |
| 3 | G-1613938 | CONNECTOR, Flexible Exhaust | 1 |
| 4 | G-1613939 | FLANGE, Muffler Upper | 1 |
| 5 | G-7812035 | MUFFLER | 1 |
| 6 | 7817195 | RAINCAP | 1 |
| 7 | 7817170 | RUBBER, Neoprene, 3/16" x 2" Wide x 6'-0" Long | 1 |
| 8 | 6200041 | NUT, 1/4" Hex, Cadmium Plated | 4 |
| 9 | 6300062 | NUT, 3/8" Hex, Cadmium Plated | 8 |
| 10 | 6300121 | NUT, 3/4" Hex, Cadmium Plated | 24 |
| 11 | 7000109-11 | SCREW, Hex Head Cap, 1/4" x 1-1/4", Grade 5, Cadmium Plated | 4 |
| 12 | 7000112-11 | SCREW, Hex Head Cap, 1/4" x 2", Grade 5, Cadmium Plated | 2 |
| 13 | 7000208-11 | SCREW, Hex Head Cap, 3/8" x 1", Grade 5, Cadmium Plated | 8 |
| 14 | 7000440-11 | SCREW, Hex Head Cap, 3/4" x 2", Grade 5, Cadmium Plated | 24 |
| 15 | 6320042 | NUT, 1/4" Hex Jam, Cadmium Plated | 1 |
| 16 | G-1613942 | BUTTON | 1 |
| 17 | G-1613941 | ADAPTER, Kill Cylinder | 1 |
| 18 | G-7608063 | WASHER, 3/8" Bar-Seal | 8 |
| 19 | 7619033 | WASHER, 1/4" Regular Spring Lock, Cadmium Plated | 6 |
| 20 | 7619041 | WASHER, 3/8" Regular Spring Lock, Cadmium Plated | 8 |
| 21 | 7619066 | WASHER, 3/4" Regular Spring Lock, Cadmium Plated | 24 |
| 22 | 7802194 | CYLINDER, Clutch Actuation | 1 |
| 23 | G-7802439 | CYLINDER, Engine Kill | 1 |
| 24 | 7802478 | CONNECTOR, Weatherhead #1468 x 4 x 4K | 2 |
| 25 | 7804223 | ELBOW, Weatherhead #1469 x 4 x 4K | 4 |
| *26 | 7818038 | SENDER, Tachometer, Dixson #201A | 1 |
| *27 | 7818046 | SENDER, Temperature, Stewart Warner #362-AH | 1 |
| *28 | 7818047 | SENDER, Oil Pressure, Steward Warner #353-Z | 1 |
| 29 | 7000481-11 | SCREW, Hex Head Cap, 7/8" x 2", Grade 5, Cadmium Plated | 8 |
| 30 | 7619074 | WASHER, 7/8" Regular Spring Lock, Cadmium Plated | 8 |
| 31 | 7819106-0 | TUBING, 1/4" Synflex | As Req'd. |
| 32 | 7804220 | ELBOW, Weatherhead #1469 x 4K | 1 |
| 33 | 7805175 | FITTING, Aeroquip #412-20-24S | 1 |
| 34 | 6100037 | HOSE, Aeroquip #2651-24 | 5' |
| 35 | 7802477 | CONNECTOR, Weatherhead #1468 x 4K | 1 |
| 36 | 7807013 | HEATER, Circulation (For 240 V Cranes) | 1 |
| | 7807016 | HEATER, Circulation (For 120 V Cranes) | 1 |
| 37 | 6300081 | NUT, 1/2" Hex, Cadmium Plated | 8 |
| 38 | 7000307-11 | SCREW, Hex Head Cap, 1/2" x 2", Grade 5, Cadmium Plated | 8 |
| 39 | 7619050 | WASHER, 1/2" Regular Spring Lock, Cadmium Plated | 8 |

*NOTE: Sender is required only on engines equipped with electrical gages.

NOT APPLICABLE
TO THIS ORDER

SEE DRAWING 1613960

IN APPENDIX

## G.M. ENGINE

NOT APPLICABLE
TO THIS ORDER

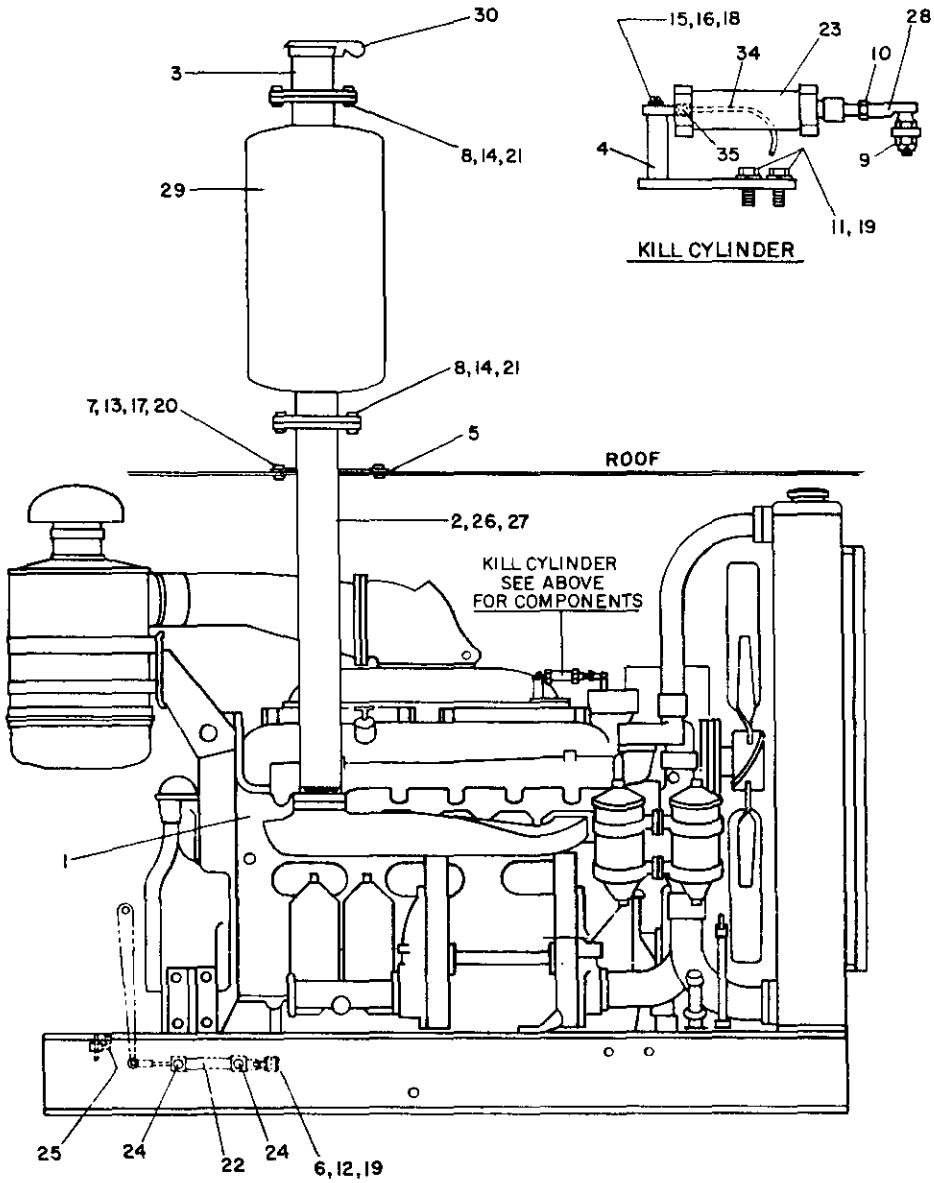


ITEMS 31, 32 AND 33 ARE NOT SHOWN

LT-160155

## G.M. ENGINE

| Item No. | Part No. | Description | No. Req'd. |
|---|---|---|---|
| 1 | 1612941 | ENGINE, G.M. 12V-71 | 1 |
| 2 | 1612932 | SUPPORT, Muffler | 2 |
| 3 | 1612934 | FLANGE, Muffler Upper | 2 |
| 4 | G-1613944 | BRACKET, Kill Cylinder | 1 |
| 5 | 7817170 | RUBBER, Neoprene, 3/16" x 2" Wide x 48" Long | 2 |
| 6 | 6300041 | NUT, 1/4" Hex, Cadmium Plated | 4 |
| 7 | 6300062 | NUT, 3/8" Hex, Cadmium Plated | 16 |
| 8 | 6300103 | NUT, 5/8" Hex, Cadmium Plated | 32 |
| 9 | 6310043 | NUT, Flexloc #21FC-428, 1/4"-28 UNF | 1 |
| 10 | 6320041 | NUT, Hex, Jam, 1/4"-28 UNF, Cadmium Plated | 1 |
| 11 | 7000108-11 | SCREW, Hex Head Cap, 1/4" x 1", Grade 5, Cadmium Plated | 2 |
| 12 | 7000109-11 | SCREW, Hex Head Cap, 1/4" x 1-1/4", Grade 5, Cadmium Plated | 4 |
| 13 | 7000208-11 | SCREW, Hex Head Cap, 3/8" x 1", Grade 5, Cadmium Plated | 16 |
| 14 | 7000397-11 | SCREW, Hex Head Cap, 5/8" x 2", Grade 5, Cadmium Plated | 32 |
| 15 | 7053092-13 | SCREW, Pan Head Machine #10-24 x 3/4", Nickel Plated | 1 |
| 16 | 7400443 | TUBING, Stainless Steel, 1/4" O.D. x .035" Wall x 5/16" Long | 1 |
| 17 | G-7608063 | WASHER, 3/8" Bar Seal | 16 |
| 18 | 7619025 | WASHER, #10 Regular Spring Lock, Cadmium Plated | 1 |
| 19 | 7619033 | WASHER, 1/4" Regular Spring Lock, Cadmium Plated | 6 |
| 20 | 7619041 | WASHER, 3/8" Regular Spring Lock, Cadmium Plated | 16 |
| 21 | 7619058 | WASHER, 5/8" Regular Spring Lock, Cadmium Plated | 32 |
| 22 | 7802194 | CYLINDER, Clutch Actuation | 1 |
| 23 | G-7802440 | CYLINDER, Engine Kill | 1 |
| 24 | 7802478 | CONNECTOR, Weatherhead #1468 x 4 x 4K | 2 |
| *25 | 7804223 | ELBOW, Weatherhead #1469 x 4 x 4K | 5 |
| 26 | 7808026 | INSULATION, 1500°F, 4" Pipe | 2 |
| 27 | 7809026 | JACKET, Cut Roll Alluminum | 2 |
| 28 | 7809014 | JOINT, Ball | 1 |
| 29 | 7812031 | MUFFLER | 2 |
| 30 | 7817017 | RAINCAP | 2 |
| †31 | 7818038 | SENDER, Tachometer, Dixson #201A | 1 |
| †32 | 7818046 | SENDER, Temperture, Stewart Warner #362-AH | 1 |
| †33 | 7818047 | SENDER, Oil Pressure, Steward Warner #353-Z | 1 |
| 34 | 7819106-0 | TUBING, 1/4" Synflex | As Req'd. |
| 35 | 7804220 | CONNECTOR, Weatherhead #1469 x 4K | 1 |

*NOTE: Elbows on Air Starter and Throttle Actuator are not shown (One elbow each).
†NOTE: Sender is required only on engines equipped with electrical gages.

NOT APPLICABLE
TO THIS ORDER

## HOIST SELECTOR VALVE SUBPLATE AND HOLDING VALVE ASSEMBLY (1607205)

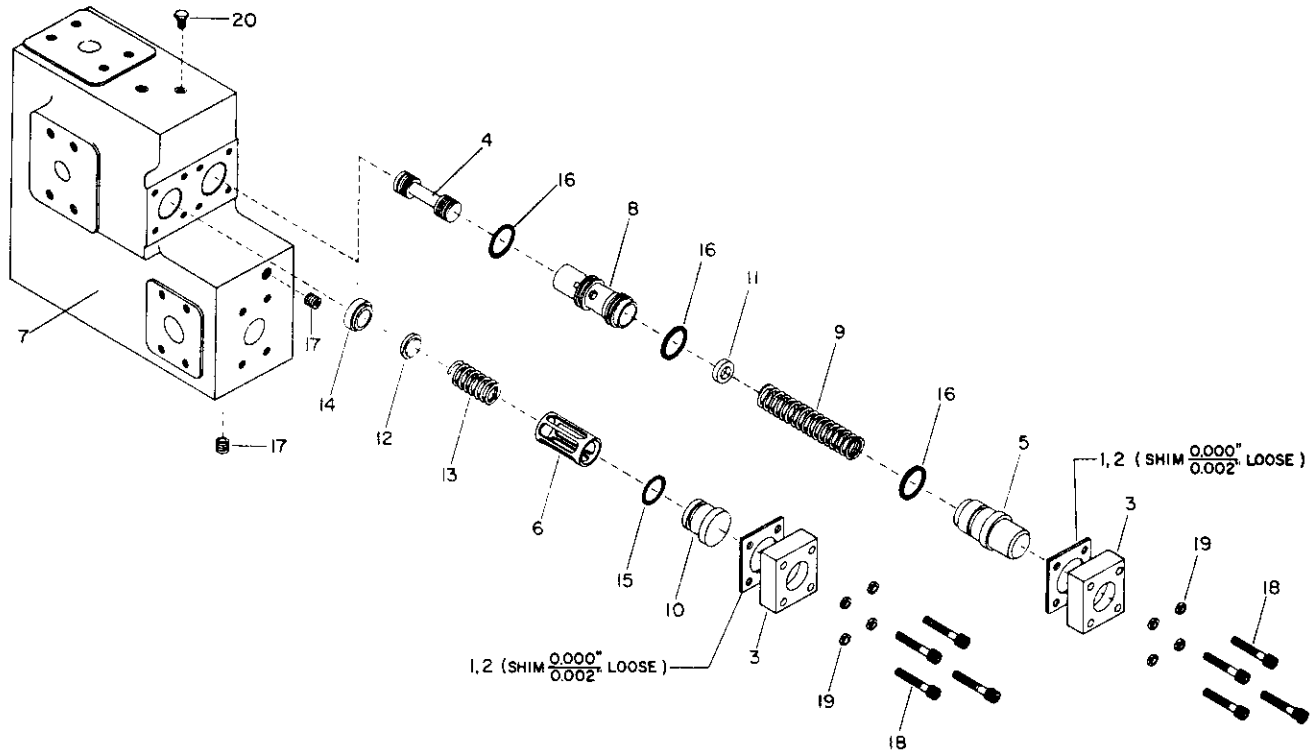


LT-160079

| Item No. | Part No. | Description | No. Req'd. |
|---|---|---|---|
| 1 | 1600214 | SHIM, 0.005" | 2 |
| 2 | 1600215 | SHIM, 0.007" | 2 |
| 3 | 1600223 | FLANGE, Valve | 2 |
| 4 | 1600269 | SPOOL, Check Valve | 1 |
| 5 | 1601277 | HOUSING, Spring | 1 |
| 6 | 1602297 | CAGE, Check Valve | 1 |
| 7 | 1607206 | SUBPLATE | 1 |
| 8 | 1612239 | SLEEVE | 1 |
| 9 | 1612240 | SPRING | 1 |
| 10 | 1612241 | CAP, Check Valve | 1 |
| 11 | 1613265 | WASHER, Spring | 1 |
| 12 | 1710324 | DISC, Valve | 1 |
| 13 | 1710326 | SPRING | 1 |
| 14 | 1710331 | SEAT | 1 |
| 15 | 2410022-220 | PACKING, O-Ring | 1 |
| 16 | 2410022-222 | PACKING, O-Ring | 3 |
| 17 | 6875004 | PLUG, Standard Countersunk, 1/2" | 2 |
| 18 | 7006260-08 | SCREW, Hex Socket Head Cap, 7/16" x 2", Cadmium Plated | 8 |
| 19 | 7612016-C | WASHER, 7/16" High Collar Spring Lock, Cadmium Plated | 8 |
| 20 | 7815051 | PLUG, Weatherhead #7230 x 4 | 1 |

## HOIST SELECTOR VALVE (G-1614251)†

NOT APPLICABLE
TO THIS ORDER

SEE DRAWING 1614291

.....IN APPENDIX

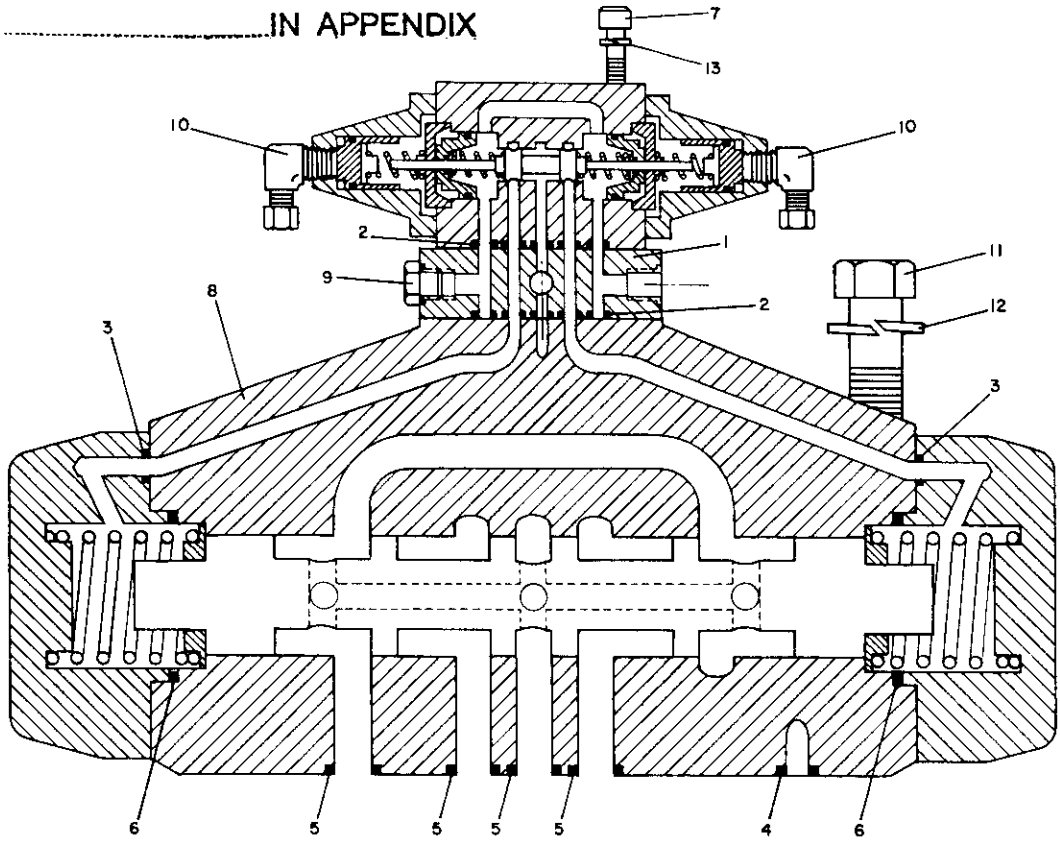


LT-160148

| Item No. | Part No. | Description | No. Req'd. |
|---|---|---|---|
| 1 | 1614243 | BLOCK, Valve Operating Mounting | 1 |
| 2 | 2410022-014 | PACKING, O-Ring | 10 |
| 3 | 2410022-016 | PACKING, O-Ring | 2 |
| 4 | 2410022-210 | PACKING, O-Ring | 3 |
| 5 | 2410022-223 | PACKING, O-Ring | 4 |
| 6 | G-2410022-230 | PACKING, O-Ring | 2 |
| 7 | 7006116 | SCREW, Hex Socket Head Cap, 1/4" x 3" | 4 |
| *8 | G-7500341 | VALVE, Hoist Selector (Includes Items 3, 4, 5 and 6 and 5 of Item 2) | 1 |
| 9 | 7815051 | PLUG, Weatherhead #7230 x 4 | 1 |
| †10 | 7804223 | ELBOW, Weatherhead #1469 x 4 x 4K | 2 |
| †11 | 7000443-11 | SCREW, Hex Head Cap, 3/4" x 2-3/4", Grade 5, Cadmium Plated | 6 |
| †12 | 7619066 | WASHER, 3/4" Regular Spring Lock, Cadmium Plated | 6 |
| 13 | 7612010 | WASHER, 1/4" Hi-Collar, Spring Lock | 4 |

NOTE: †Items 10, 11 and 12 are not included in Assembly Part No. G-1614251
*The small Directional Control Valve included in Part No. G-7500341 may be purchased separately per Part No. G-7500342 Valve.

## SWING GEAR REDUCER ASSEMBLY WITH FUNK BRAKE (G-1614300)

NOT APPLICABLE
TO THIS ORDER

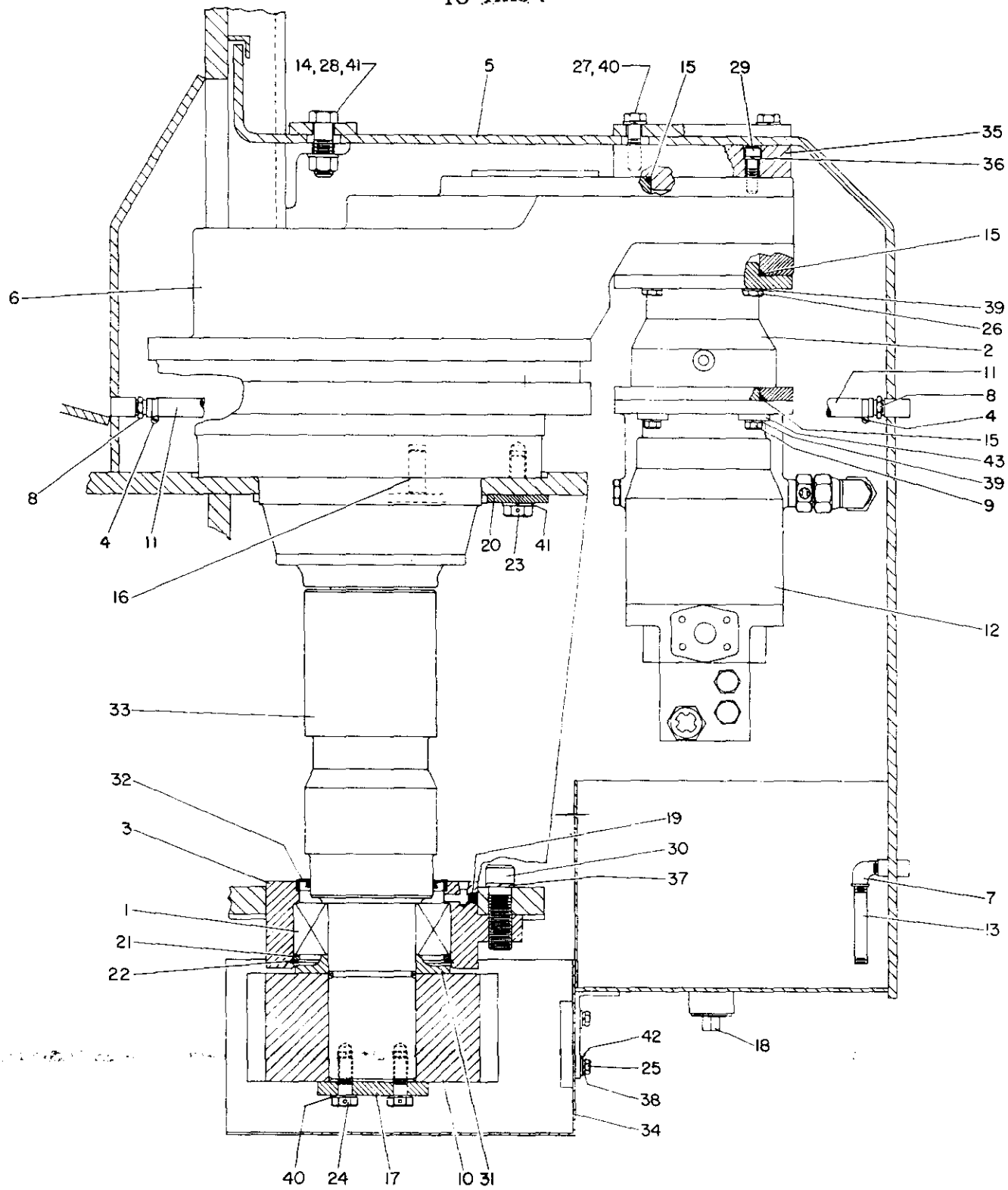


LT-160057

## SWING GEAR REDUCER ASSEMBLY WITH FUNK BRAKE (G-1614300)

| Item No. | Part No. | Description | No. Req'd. |
|---|---|---|---|
| 1 | ZB-3937 | BEARING | 2 |
| 2 | 7801106 | BRAKE, Swing (See Note #1) | 2 |
| 3 | G-1614302 | CARRIER, Swing Pinion Shaft Bearing | 2 |
| 4 | 7802088 | CLAMP, Gates #10 | 4 |
| 5 | G-1614307 | COVER, Swing | 1 |
| 6 | 7803012 | DRIVE, Three Stage Reduction | 2 |
| 7 | 6829002 | ELBOW, Standard M.I. Street, 1/4" x 90° | 1 |
| 8 | 7813028 | NIPPLE | 4 |
| 9 | 7000306-11 | SCREW, Hex Head Cap, 1/2" x 1-3/4", Grade 5, Cadmium Plated | 8 |
| 10 | G-1614304 | GEAR, Swing Pinion | 2 |
| 11 | 6100039 | HOSE, Gates #4230-0135, 30" Long | 2 |
| 12 | G-7812046 | MOTOR, Hydraulic Swing | 2 |
| 13 | 6817011 | NIPPLE, Standard Pipe, 1/4" x 4" | 1 |
| 14 | 6300121 | NUT, 3/4" Hex, Cadmium Plated | 4 |
| 15 | 2410022-250 | PACKING, O-Ring | 6 |
| 16 | 6511216 | PIN, Dowell, 3/4" x 2" | 4 |
| 17 | 1617306 | PLATE, End Cover | 2 |
| 18 | 6873008 | PLUG, 1" Standard Cored Square Head | 1 |
| 19 | 6875001 | PLUG, 1/8" Standard Countersunk | 2 |
| 20 | G-1614305 | RETAINER, Dowell Pin | 2 |
| 21 | G-1614311 | RING, Pinion Bearing Back-Up | 2 |
| 22 | G-6910073 | RING, Retaining | 2 |
| 23 | 2401590 | SCREW, Hex Drilled Head Cap, 3/4" x 2-3/4", Grade 5, Cadmium Plated | 16 |
| 24 | 2405032 | SCREW, Hex Drilled Head Cap, 5/8" x 18UNF x 2", Grade 5, Cadmium Plated | 8 |
| 25 | 7000208-11 | SCREW, Hex Head Cap, 3/8" x 1", Grade 5, Cadmium Plated | 6 |
| 26 | 7000305-11 | SCREW, Hex Head Cap, 1/2" x 1-1/2", Grade 5, Cadmium Plated | 8 |
| 27 | 7000397-11 | SCREW, Hex Head Cap, 5/8" x 2", Grade 5, Cadmium Plated | 8 |
| 28 | 7000442-11 | SCREW, Hex Head Cap, 3/4" x 2-1/2", Grade 5, Cadmium Plated | 4 |
| 29 | 7006307-08 | SCREW, Hex Socket Head Cap, 1/2" x 2", Cadmium Plated | 8 |
| 30 | 7006526-08 | SCREW, Hex Socket Head Cap, 1" x 3", Cadmium Plated | 14 |
| 31 | G-1614306 | SEAL, Swing Pinion | 2 |
| 32 | YS-5500-D | SEAL | 2 |
| 33 | G-1614303 | SHAFT, Swing Pinion | 2 |
| 34 | G-1614312 | SHIELD, Dual Pinion | 1 |
| 35 | G-1614301 | SUPPORT, Swing Reducer | 2 |
| 36 | 7612018-C | WASHER, 1/2" Hi-Collar Spring Lock, Cadmium Plated | 8 |
| 37 | G-7612026-C | WASHER, 1" Hi-Collar Spring Lock, Cadmium Plated | 14 |
| 38 | 7619041 | WASHER, 3/8" Regular Spring Lock, Cadmium Plated | 6 |
| 39 | 7619050 | WASHER, 1/2" Regular Spring Lock, Cadmium Plated | 16 |
| 40 | 7619058 | WASHER, 5/8" Regular Spring Lock, Cadmium Plated | 16 |
| 41 | 7619066 | WASHER, 3/4" Regular Spring Lock, Cadmium Plated | 20 |
| 42 | 7621024 | WASHER, 3/8" Type A Narrow, 0.81" O.D., Cadmium Plated | 6 |
| 43 | 1612933 | WASHER | 8 |

NOTE #1: For replacement brake see page F-8 and order items.

NOT APPLICABLE TO THIS ORDER

## SWING GEAR DRIVE (7803012)

| Item No. | Part No. | Description | No. Req'd. |
|---|---|---|---|
| 1 | 1617311-001 | HOUSING, Output | 1 |
| 2 | 1617311-002 | CAGE, Planetary | 1 |
| 3 | G-1617311-003 | GEAR, Planet | 3 |
| 4 | 1617311-004 | SHAFT, Planet Gear | 3 |
| 5 | 1617311-005 | PLATE, Output Shaft | 1 |
| 6 | 1617311-006 | PLATE, Planet Gear Shaft | 3 |
| 7 | 1617311-007 | SHAFT, Output | 1 |
| 8 | 1617311-008 | SHIM, Group | 1 |
| 9 | 1617311-009 | GASKET | 1 |
| 10 | 1617311-010 | RETAINER, Seal | 1 |
| 11 | 1617311-011 | HOUSING, Input | 1 |
| 12 | 1617311-012 | GEAR, Driven 1st Stage | 1 |
| 13 | 1617311-013 | SHAFT, 2nd Stage | 1 |
| 14 | 1617311-014 | GEAR, Driven 2nd Stage | 1 |
| 15 | G-1617311-015 | GEAR, Sun | 1 |
| 16 | G-1617311-016 | PACKING, O-Ring | 2 |
| 17 | 1617311-017 | GEAR, Ring | 1 |
| 18 | 1617311-018 | STUD | 3 |
| 19 | 1617311-019 | SPACER, Bearing | 3 |
| 20 | 1617311-020 | PLATE, Cover | 1 |
| 21 | G-1617311-021 | GASKET | 1 |
| 22 | 1617311-022 | SHAFT, Input | 1 |
| 23 | 1617311-023 | PLUG | 1 |
| 24 | 1617311-024 | WASHER | 1 |
| 25 | G-1617311-025 | ASSEMBLY, Bearing | 3 |
| 26 | G-1617311-026 | BEARING | 1 |
| 27 | YS-5008 | SEAL | 1 |
| 28 | ZC-2364 | BEARING | 1 |
| 29 | ZC-2400 | BEARING | 1 |
| 30 | ZC-2401 | BEARING | 3 |
| 31 | ZT-4300 | BEARING | 1 |
| 32 | ZT-5010 | BEARING | 1 |
| 33 | 2410022-250 | PACKING, O-Ring | 2 |
| 34 | 5506304-00F | BOLT, Place, 7/16" — 20 x 1" | 3 |
| 35 | 5506406 | BOLT, Place, 1/2" — 20 x 1-1/4" | 6 |
| *36 | 5506426-00F | BOLT, Place, 1/2" — 20 x 3-3/4" | 2 |
| *37 | 5506430-00F | BOLT, Place, 1/2" — 20 x 4-1/4" | 7 |
| 38 | 6310080 | NUT, Flexloc #20FC820, 1/2" — 20 UNF | 12 |
| 39 | 6571214 | PIN, Spring Slot Steel Standard, 3/16" x 7/8" | 3 |
| **40 | 6573224 | PIN, Spring Slot Steel Standard, 1/2" x 1-1/2" | 2 |
| 41 | 6874002 | PLUG, Standard Solid Square Head, 1/4" | 1 |
| 42 | G-6910071 | RING, Retaining | 2 |
| 43 | G-6910072 | RING, Retaining | 3 |
| 44 | 7000303-11 | SCREW, Hex Head Cap, 1/2" x 1", Grade 5, Cadmium Plated | 4 |
| 45 | 7007158-08 | SCREW, Hex Socket Flat Head Cap, 5/16" x 1-1/4", Cadmium Plated | 8 |
| 46 | 7815054 | PLUG, Magnetic Drain, 1/2" NPT | 2 |

NOTE: *Measure Bolt to determine proper size.
**Not shown.

## SWING BRAKE ASSEMBLY — FUNK BRAKE (7801106)*

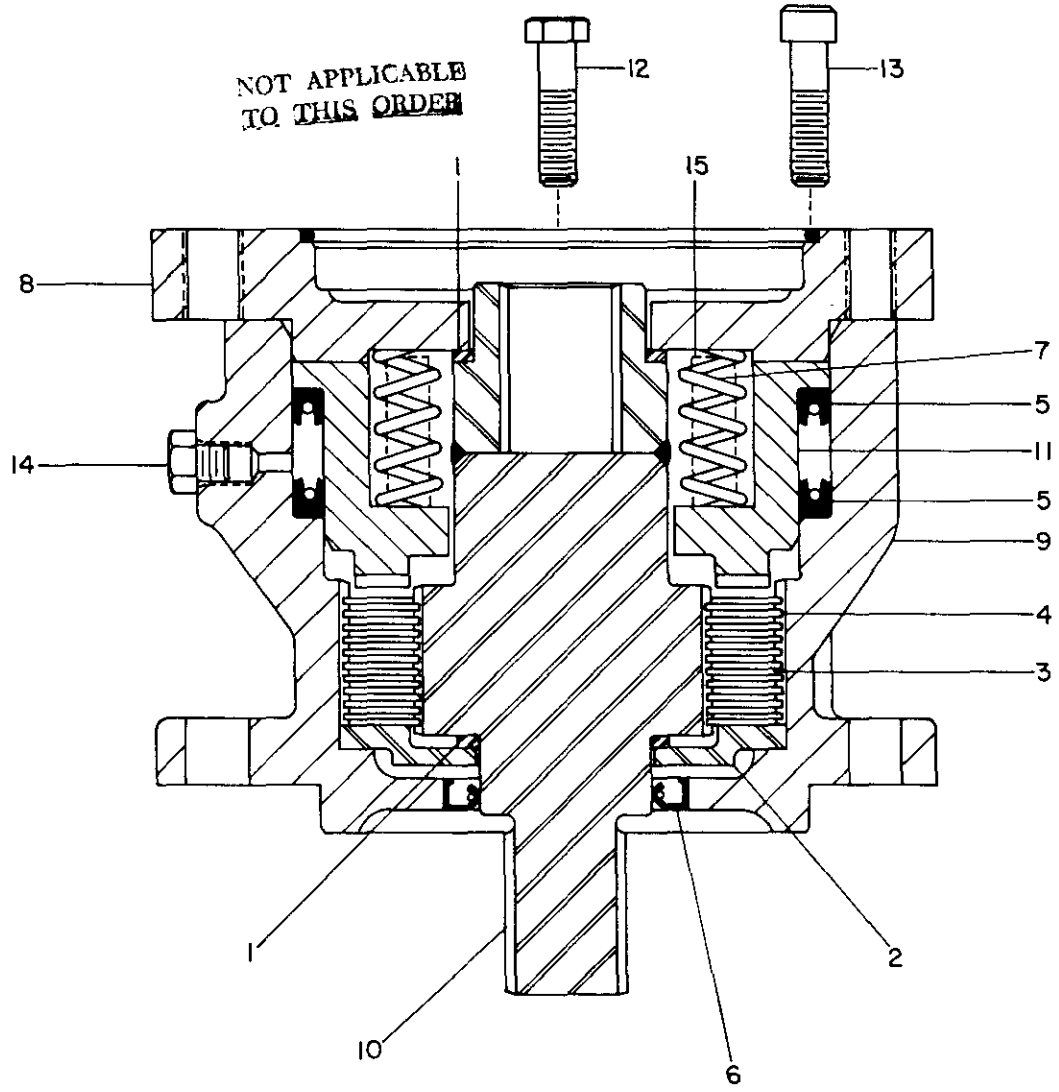


LT-160055

| Item No. | Part No. | Description | No. Req'd. |
|---|---|---|---|
| *1 | G-1617310-001 | WASHER | 2 |
| *2 | G-1617310-002 | PLATE-CLUTCH, Drive | 1 |
| *3 | G-1617310-003 | PLATE, Clutch | 10 |
| *4 | G-1617310-004 | PLATE, Separator | 10 |
| *5 | G-7918611 | SEAL, Piston | 2 |
| *6 | YS-1761 | SEAL, Shaft | 1 |
| 7 | G-1617310-005 | SPRING | 5 |
| 8 | 1617310-006 | HOUSING, Input | 1 |
| 9 | 1617310-007 | HOUSING, Output | 1 |
| 10 | 1617310-008 | SHAFT | 1 |
| 11 | 1617310-009 | PISTON, Brake | 1 |
| 12 | 7000210-11 | SCREW, Hex Head Cap, 3/8" x 1-1/2", Grade 5, Cadmium Plated | 2 |
| 13 | 7006210-08 | SCREW, Hex Socket Head Cap, 3/8" x 1-1/2", Grade 5, Cadmium Plated | 4 |
| 14 | 7815051 | PLUG, Weatherhead #7230 x 4 | 1 |
| 15 | 6572416 | PIN, Spring Slot Steel Standard, 3/8" x 1" | 5 |

*NOTE: Items 1 through 6 inclusive are recommended replacement parts for brake reconditioning.

## GANTRY SHEAVE ASSEMBLY

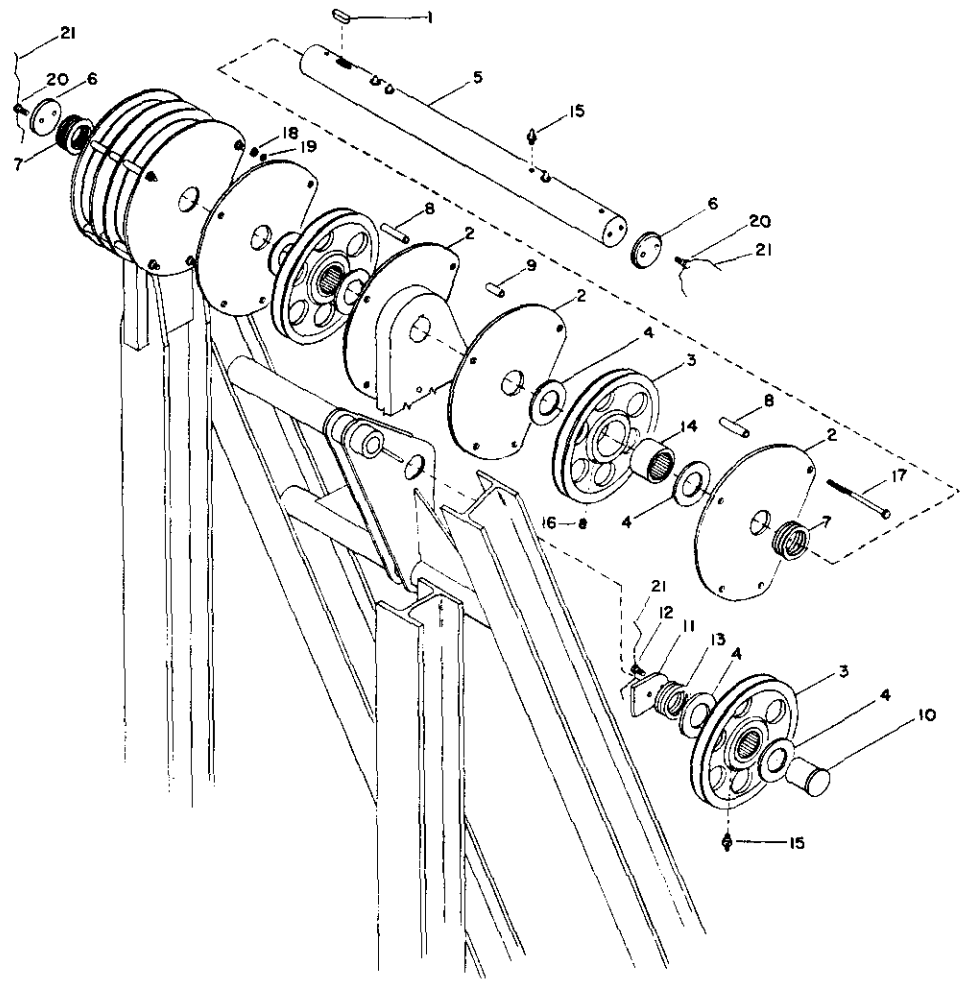


LT-160113

| Item No. | Part No. | Description | No. Req'd. |
|---|---|---|---|
| 1 | 2404082 | KEY, 5/8" x 1" x 2-1/2" Long | 1 |
| 2 | 1612406 | KEEPER | 8 |
| 3 | 1615716 | SHEAVE | 5 |
| 4 | 1615714 | WASHER, Thrust | 10 |
| 5 | 1612407 | SHAFT | 1 |
| 6 | 1612408 | CAP | 2 |
| 7 | 1612409 | WASHER, Shim | 8 |
| 8 | 1612410 | SPACER | 16 |
| 9 | 1612411 | SPACER | 6 |
| 10 | 1612432 | SHAFT | 1 |
| 11 | 1612425 | CAP | 1 |
| 12 | 2400060 | SCREW, Drilled Head Cap, 3/4' x 1-3/4", Grade 5 | 2 |
| 13 | 1612409 | WASHER, Shim | 3 |
| 14 | ZB-3751 | BEARING, Roller with Inner Race | 5 |
| 15 | 7805052 | FITTING, Grease, 1/8" NPT | 5 |
| 16 | 6875001 | PLUG, Standard Countersunk, 1/8" | 4 |
| 17 | 7000475-11 | SCREW, Hex Head Cap, 3/4" x 11-1/2", Grade 5, Cadmium Plated | 8 |
| 18 | 6300121 | NUT, 3/4" Hex, Cadmium Plated | 8 |
| 19 | 7619066 | WASHER, 3/4" Regular Spring Lock, Cadmium Plated | 8 |
| 20 | 2405016 | SCREW, Drilled Head Cap, 3/4" x 2", Grade 5 | 4 |
| 21 | 7822095 | WIRE, Annealed Stainless Steel, 0.064" Dia. | As Req'd. |

## TWO SHEAVE BLOCK ASSEMBLY (1612420 R.H.) (1612442 L.H.)

NOT APPLICABLE TO THIS ORDER

SEE DRAWING 1612455 IN APPENDIX

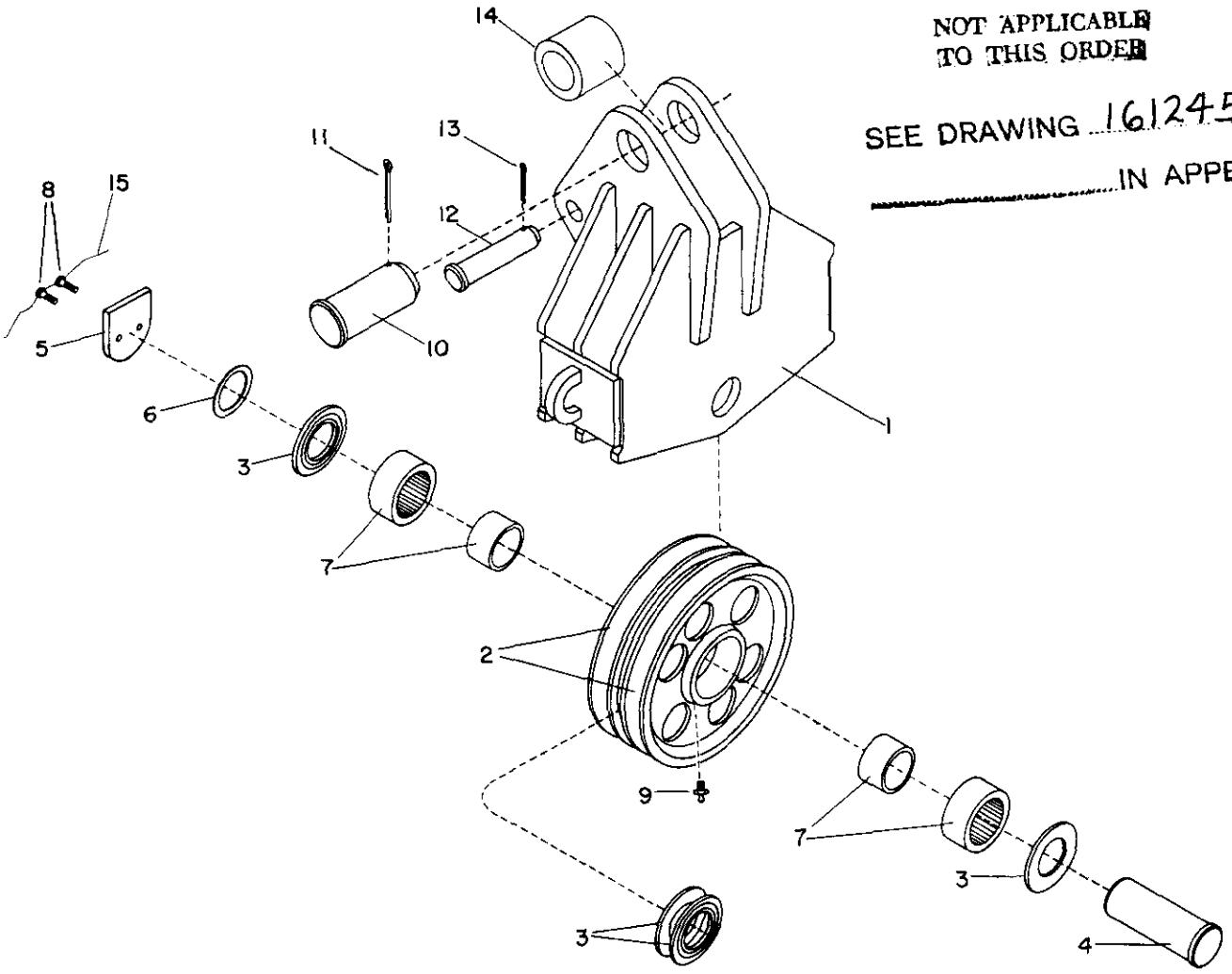


LT-160114

| Item No. | Part No. | Description | No. Req'd. |
|---|---|---|---|
| 1 | 1612421 | BLOCK, Right Hand | 1 |
| | 1612440 | BLOCK, Left Hand | 1 |
| 2 | 1615716 | SHEAVE | 2 |
| 3 | 1615714 | WASHER, Thrust | 4 |
| 4 | 1612424 | SHAFT | 1 |
| 5 | 1612425 | CAP | 1 |
| 6 | 1612409 | WASHER, Shim | 3 |
| 7 | ZB-3751 | BEARING, Roller with Inner Race | 2 |
| 8 | 2400060 | SCREW, Drilled Head Cap, 3/4" x 1-3/4", Grade 5 | 2 |
| 9 | 7805052 | FITTING, Grease, 1/8" NPT | 2 |
| 10 | 1612438 | PIN | 1 |
| 11 | 6502440-S | PIN, Cotter, 3/8" x 5", Stainless Steel | 1 |
| 12 | 1612435 | PIN | 1 |
| 13 | 6501624 | PIN, Cotter, 1/4" x 3" | 1 |
| 14 | 1612437 | BUSHING | 1 |
| 15 | 7822095 | WIRE, Annealed Stainless Steel, 0.064" Dia. | As Req'd. |

## BOOM SAVER GROUP

NOT APPLICABLE
TO THIS ORDER

SEE DRAWING 1616025
IN APPENDIX

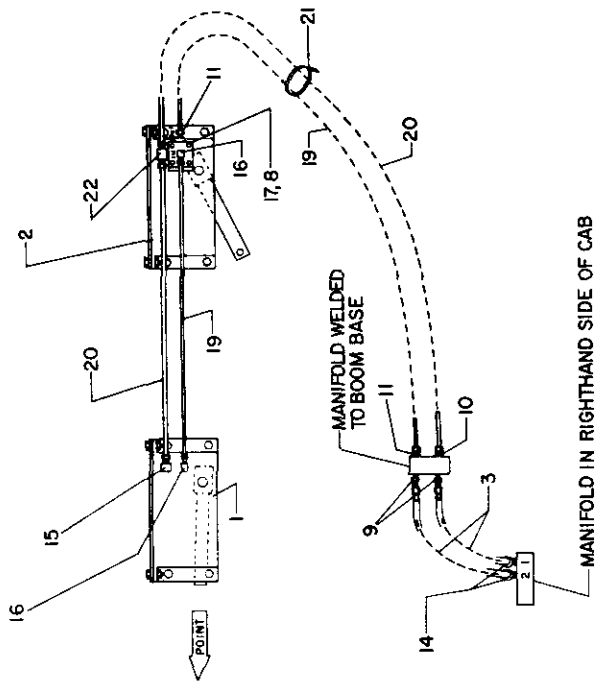


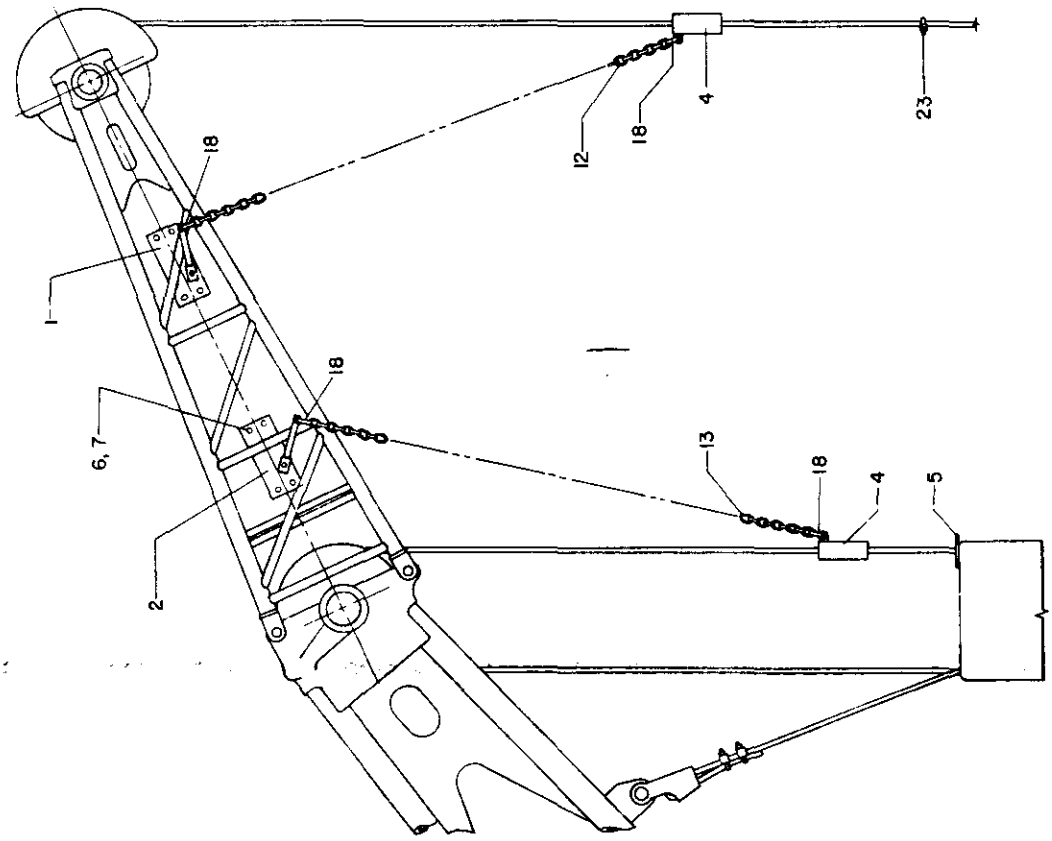

LT-160129

## BOOM SAVER GROUP

| Item No. | Part No. | Description | No. Req'd. |
|---|---|---|---|
| *1 | 1615056-001 | ASSEMBLY, Whip Travel Limiter | 1 |
| *2 | 1615056-002 | ASSEMBLY, Main Travel Limiter | 1 |
| 3 | G-2400061-32 | ASSEMBLY, Hose, Consisting of: | 2 |
| | | 66"—6100034 HOSE, Aeroquip #2651-4 | |
| | | 2—7805081 FITTING, Aeroquip #4411-4S | |
| 4 | 1615879 | FOLLOWER, Line-Complete With 2—1292141 INSERTS | 2 |
| 5 | 1615845 | STRIKER | 1 |
| 6 | 6310082 | NUT, Flexloc #50 FAF-813, 1/2"-13 UNC | 8 |
| 7 | 7000304-11 | SCREW, Hex Head Cap, 1/2" x 1-1/4", Grade 5, Cadmium Plated | 8 |
| 8 | 7500017 | VALVE, 1/4" Shuttle | 1 |
| 9 | 7802296 | CONNECTOR, Weatherhead #C5205 x 4 x 4 | 2 |
| 10 | 7802388 | CONNECTOR, Weatherhead #1468 x 6K | 1 |
| 11 | 7802478 | CONNECTOR, Weatherhead #1468 x 4 x 4 | 2 |
| 12 | 7802436 | CHAIN, Proof Coil, 1/4" x 12'-0" Long, Galvanized | 1 |
| 13 | 7802436 | CHAIN, Proof Coil, 1/4" x 8-0" Long, Galvanized | 1 |
| 14 | 7804117 | ELBOW, Weatherhead #C5405 x 4 x 4 | 2 |
| 15 | 7804219 | ELBOW, Weatherhead #1469 x 6K | 1 |
| 16 | 7804223 | ELBOW, Weatherhead #1469 x 4 x 4K | 2 |
| 17 | 7813073 | NIPPLE, 1/4" x 1-1/2", Brass | 1 |
| 18 | 7818330 | SHACKLE, Crosby G-213-1/4" | 4 |
| 19 | 7819106-0 | TUBING, 1/4" Synflex | As Req'd. |
| 20 | 7819107-0 | TUBING, 3/8" Synflex | As Req'd. |
| 21 | 7819050 | TY-RAP | 20 |
| 22 | 7819146 | TEE, Weatherhead #1472 x 6K | 1 |
| 23 | 7802217 | CLIP, Crosby #G-429, 1" Wire Rope, Galvanized | 1 |

*NOTE: Parts numbered 1615056-001 and 1615056-002 are identical except for lever position.

NOT APPLICABLE
TO THIS ORDER

SEE DRAWING 1616025

.....IN APPENDIX

## LINE TRAVEL LIMITER BOX ASSEMBLY (1615056)

NOT APPLICABLE
TO THIS ORDER

SEE DRAWING 1615925
IN APPENDIX

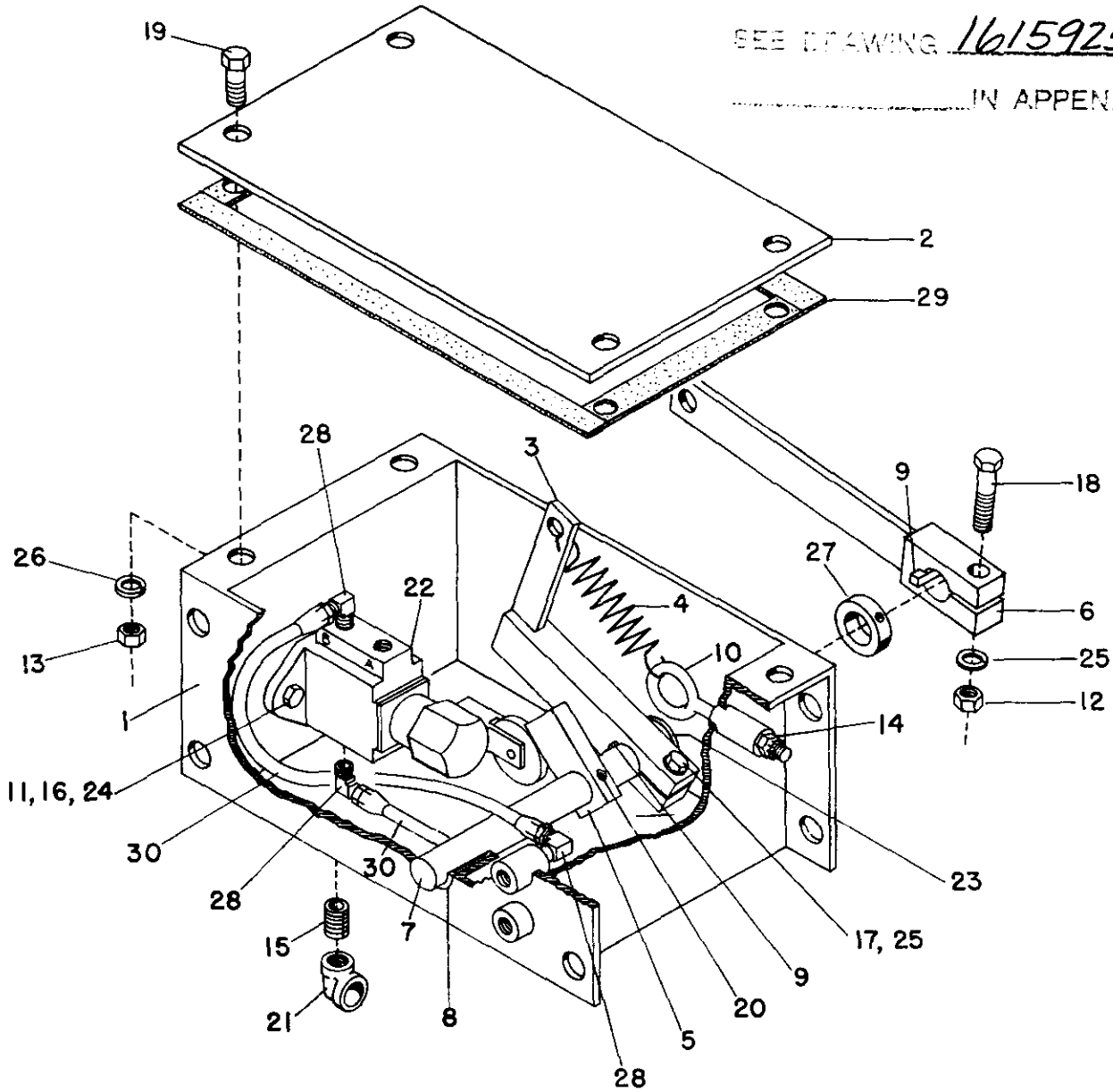

## LINE TRAVEL LIMITER BOX ASSEMBLY (1615056)

| Item No. | Part No. | Description | No. Req'd. |
|---|---|---|---|
| 1 | 1615872 | HOUSING | 1 |
| 2 | 1615873 | COVER | 1 |
| 3 | 1615874 | ARM, Spring | 1 |
| 4 | 1615875 | SPRING | 1 |
| 5 | 1615876 | CAM | 1 |
| 6 | 1615877 | LEVER | 1 |
| 7 | 1615878 | SHAFT | 1 |
| 8 | ZB-0756 | BEARING | 2 |
| 9 | 2401390 | KEY, 1/4" Square x 15/16" Long | 2 |
| 10 | 5504016 | BOLT, Closed Eye | 1 |
| 11 | 6300041 | NUT, 1/4" Hex, Cadmium Plated | 2 |
| 12 | 6300062 | NUT, 3/8" Hex, Cadmium Plated | 1 |
| 13 | 6300081 | NUT, 1/2" Hex, Cadmium Plated | 4 |
| 14 | 6310053 | NUT, Flexloc #21FA-518, 5/16" | 1 |
| 15 | 6817007 | NIPPLE, Standard Pipe, 1/4" x Close | 1 |
| 16 | 7000108-11 | SCREW, Hex Head Cap, 1/4" x 1", Grade 5, Cadmium Plated | 2 |
| 17 | 7000209-11 | SCREW, Hex Head Cap, 3/8" x 1-1/4", Grade 5, Cadmium Plated | 1 |
| 18 | 7000211-11 | SCREW, Hex Head Cap, 3/8" x 1-3/4", Grade 5, Cadmium Plated | 1 |
| 19 | 7000303-11 | SCREW, Hex Head Cap, 1/2" x 1", Grade 5, Cadmium Plated | 4 |
| 20 | 7027102-30 | SCREW, Hex Socket Head Cup Point Set, 1/4" x 3/8", Stainless Steel | 1 |
| 21 | 7500147 | VALVE, Check Exhaust | 1 |
| 22 | 7500322 | VALVE | 1 |
| 23 | 7600046 | WASHER, 3/4" W Type A, 2.0" O.D. | 1 |
| 24 | 7619033 | WASHER, 1/4" Regular Spring Lock, Cadmium Plated | 2 |
| 25 | 7619041 | WASHER, 3/8" Regular Spring Lock, Cadmium Plated | 2 |
| 26 | 7619050 | WASHER, 1/2" Regular Spring Lock, Cadmium Plated | 4 |
| 27 | 7802110 | COLLAR | 1 |
| 28 | 7804223 | ELBOW, Weatherhead #1469 x 4 x 4K | 4 |
| 29 | 7817170 | RUBBER, Neoprene Sponge, 3/16" x 2" x 18" Long | 1 |
| 30 | 7819106-0 | TUBING, 1/4" Synflex, 24" Long | 1 |

NOT APPLICABLE
TO THIS ORDER

SEE DRAWING 1615925

IN APPENDIX

## BOOM AND GANTRY SAFETY BEACONS

NOT APPLICABLE
TO THIS ORDER

SEE DRAWING 1612009-801

.....IN APPENDIX

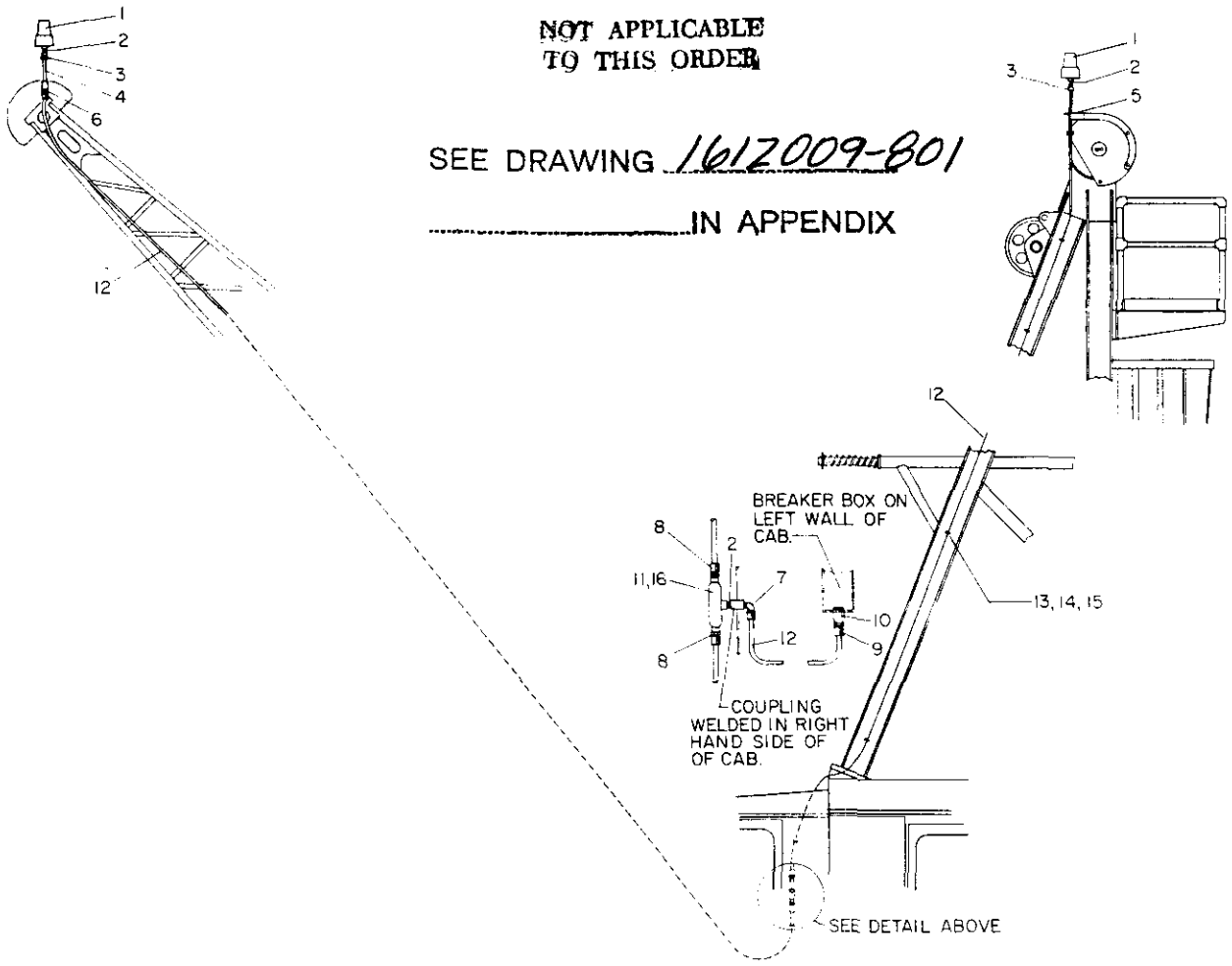


LT-160117

| Item No. | Part No. | Description | No. Req'd. |
|---|---|---|---|
| 1 | G-7811024-1 | BEACON, Red Flashing (120 VAC), Includes: 1—G-7801124 BULB, Xenon Flash | 2 |
| | G-7811024-2 | BEACON, Red Flashing (240 VAC), Includes: 1—G-7801124 BULB, Xenon Flash | 2 |
| 2 | 6817044-G | NIPPLE, Standard Pipe, 1/2" X Close, Galvanized | 2 |
| 3 | 6884024 | REDUCER, Standard M.I. Pipe, 1" x 1/2" | 2 |
| 4 | 6817081 | NIPPLE, Standard Pipe, 1" x 6" | 1 |
| 5 | 1612444 | BRACKET, Mounting | 1 |
| 6 | 7802415 | CONNECTOR, Crouse-Hinds #CGB-394 | 1 |
| 7 | G-7802491 | CONNECTOR, Crouse-Hinds #CGE-194 | 1 |
| 8 | 7802235 | CONNECTOR, Crouse-Hinds #CGB-194 | 2 |
| 9 | 7802279 | CONNECTOR, Crouse-Hinds #CGB-294 | 1 |
| 10 | 7807065 | HUB, Conduit, Appleton #HUB-75 | 1 |
| 11 | 7802149 | CONDULET, Crouse-Hinds #T-19, With Cover | 1 |
| 12 | G-7822125 | WIRE, Anixter DDS-4, #14-2 | As Req'd. |
| 13 | 6300001 | NUT, #10-24 Hex, Cadmium Plated | 6 |
| 14 | G-7053092-13 | SCREW, Pan Head, #10-24 x 3/4", Nickel Plated | 6 |
| 15 | 7802206 | CLIP, 3/8" Tube | 6 |
| 16 | 7806051 | GASKET, ESCO #GASK 1941-1/2" | 1 |

## BOOM LIGHT GROUP (MERCURY VAPOR)

NOT APPLICABLE TO THIS ORDER

SEE DRAWING 16L2008-813 IN APPENDIX

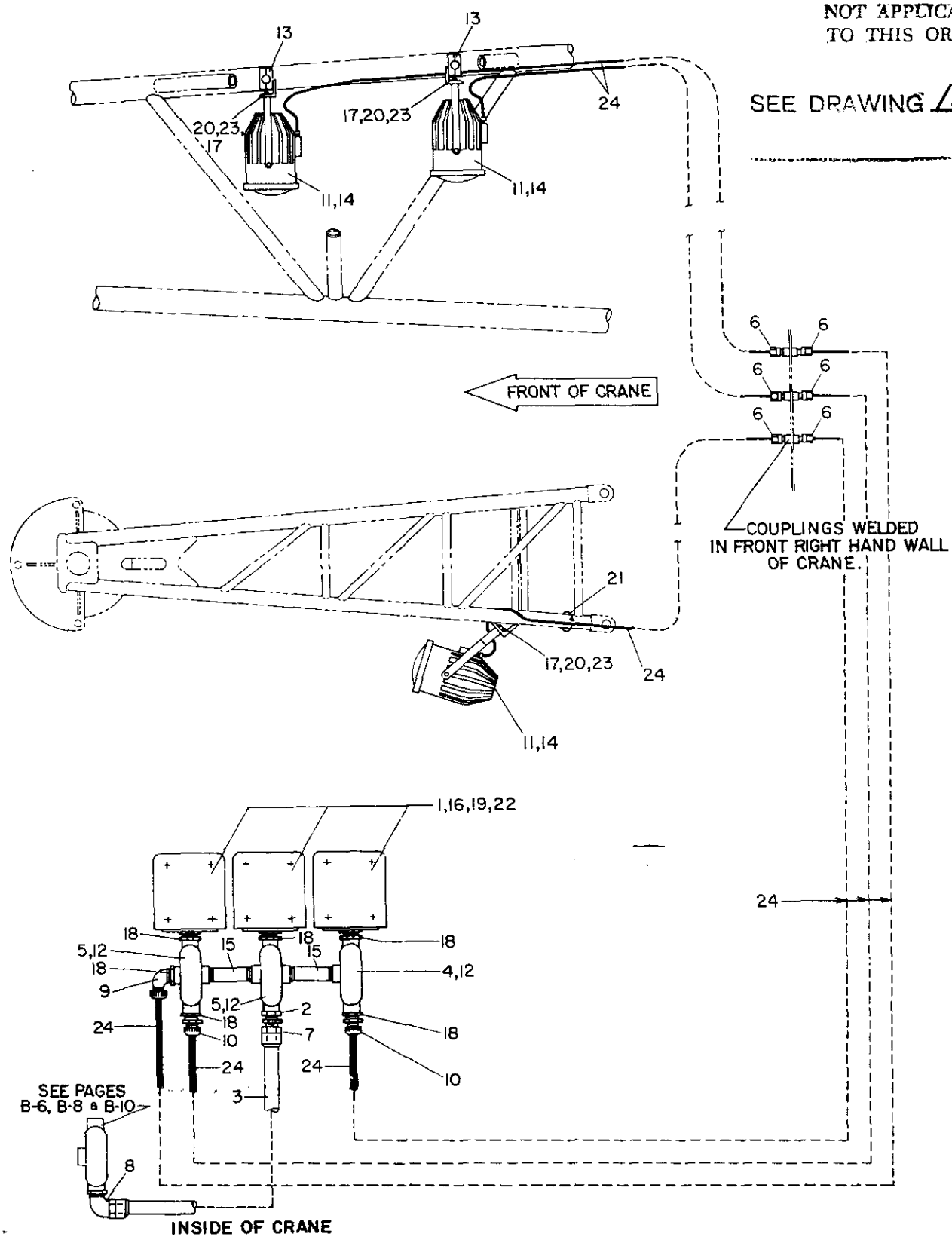


LT-160322

## BOOM LIGHT GROUP (MERCURY VAPOR)

| Item No. | Part No. | Description | No. Req'd. |
|---|---|---|---|
| 1 | 7801025 | BALLAST, Mercury Vapor Light (60 Hertz Only) | 3 |
| 2 | G-6800083-G | BUSHING, Standard M.I. Hex, 1" x 1/2", Galvanized | 1 |
| 3 | 7802404 | CONDUIT, Flexible Liquid-Tite, 1/2" | As Req'd. |
| 4 | 7802155 | CONDULET, Esco #T-39, With Cover | 1 |
| 5 | G-7802500 | CONDULET, Esco #X-39, With Cover | 2 |
| 6 | G-7802235 | CONNECTOR, Crouse-Hinds #CGB-194, 1/2" | 6 |
| 7 | 7802400 | CONNECTOR, Esco #5232, 1/2" x Straight | 1 |
| 8 | 7802418 | CONNECTOR, Esco #5252, 1/2" x 90° | 1 |
| 9 | G-7802492 | CONNECTOR, Crouse-Hinds #CGE-395, 1" x 90° | 1 |
| 10 | G-7802494 | CONNECTOR, Crouse-Hinds #CGB-395, 1" x Straight | 2 |
| 11 | 7805158 | FIXTURE, Mercury Vapor Light | 3 |
| 12 | 7806053 | GASKET, Esco #GASK 1943-1" | 3 |
| 13 | 1615825 | HANGER, Boom Light | 2 |
| 14 | 7811011 | LAMP, Mercury Vapor | 3 |
| 15 | 6817149 | NIPPLE, Standard Pipe, 1" x 5-1/2" | 2 |
| 16 | 6300081 | NUT, 1/2" Hex, Cadmium Plated | 12 |
| 17 | 6300103 | NUT, 5/8" Hex, Cadmium Plated | 3 |
| 18 | 7813052 | NUT, 1" Conduit Lock | 6 |
| 19 | 7000303-11 | SCREW, Hex Head Cap, 1/2" x 1", Grade 5, Cadmium Plated | 12 |
| 20 | 7000396-11 | SCREW, Hex Head Cap, 5/8" x 1-3/4", Grade 5, Cadmium Plated | 3 |
| 21 | 7819050 | TYRAP | 40 |
| 22 | 7619050 | WASHER, 1/2" Regular Spring Lock, Cadmium Plated | 12 |
| 23 | 7619058 | WASHER, 5/8" Regular Spring Lock, Cadmium Plated | 3 |
| 24 | 7822070 | WIRE, #14-2, Type SO-1 | As Req'd. |

NOT APPLICABLE
TO THIS ORDER

SEE DRAWING 1612008-813
IN APPENDIX

## BOOM AND GANTRY SAFETY BEACONS — EXPLOSION PROOF

NOT APPLICABLE TO THIS ORDER

SEE DRAWING NONE IN APPENDIX

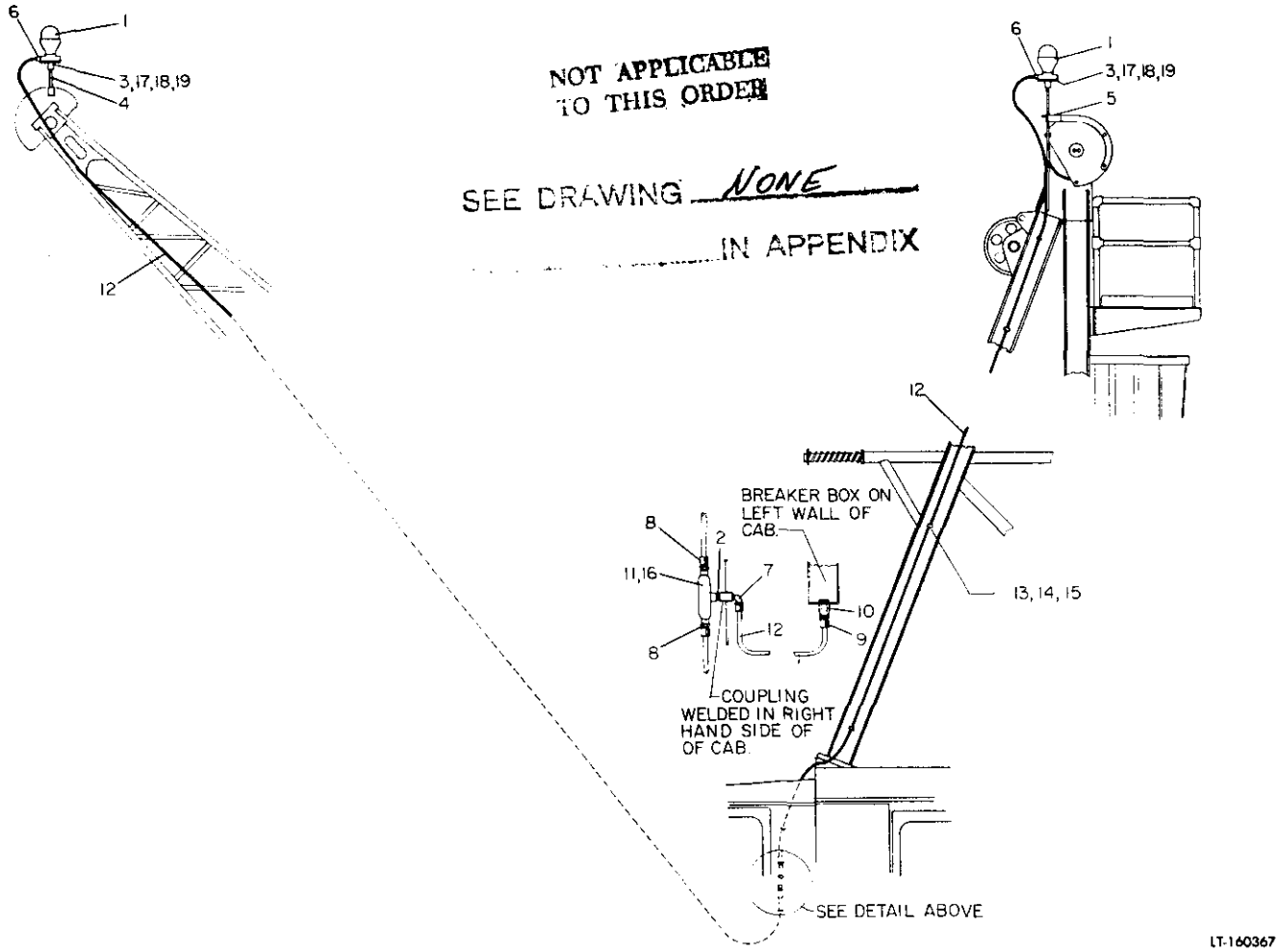


LT-160367

| Item No. | Part No. | Description | No. Req'd. |
|---|---|---|---|
| 1 | G-7805162-1 | BEACON, Red Flashing (120 V), Includes: 1—G-7801124 BULB, Xenon Flash | 2 |
| | G-7805162-2 | BEACON, Red Flashing (240 V), Includes: 1—G-7801124 BULB, Xenon Flash | 2 |
| 2 | 6817044-G | NIPPLE, Standard Pipe, 1/2" x Close, Galvanized | 1 |
| 3 | G-1618631 | BRACKET, Fixture | 2 |
| 4 | 6817081 | NIPPLE, Standard Pipe, 1" x 6" | 1 |
| 5 | 1612444 | BRACKET, Mounting | 1 |
| 6 | 7802401 | CONNECTOR, Crouse-Hinds #CGBS-2013 | 2 |
| 7 | G-7802491 | CONNECTOR, Crouse-Hinds #CGE-194 | 1 |
| 8 | 7802235 | CONNECTOR, Crouse-Hinds #CGB-194 | 2 |
| 9 | 7802279 | CONNECTOR, Crouse-Hinds #CGB-294 | 1 |
| 10 | 7807065 | HUB, Conduit, Appleton #HUB-75 | 1 |
| 11 | 7802149 | CONDULET, Crouse-Hinds #T-19, With Cover | 1 |
| 12 | G-7822125 | WIRE, Anixter DSS-4, #14-2 | As Req'd. |
| 13 | 6300001 | NUT, #10-24 Hex, Cadmium Plated | 6 |
| 14 | G-7053092-13 | SCREW, Pan Head, #10-24 x 3/4", Nickel Plated | 6 |
| 15 | 7802206 | CLIP, 3/8" Tube | 6 |
| 16 | 7806051 | GASKET, Esco #Gask 1941-1/2" | 1 |
| 17 | 7000110-11 | SCREW, Hex Head Cap, 1/4" x 1-1/2", Grade 5, Cadmium Plated | 8 |
| 18 | 7619033 | WASHER, 1/4" Regular Spring Lock, Cadmium Plated | 8 |
| 19 | 6300041 | NUT, 1/4" Hex, Cadmium Plated | 8 |

## BOOM LIGHT GROUP — EXPLOSION PROOF (MERCURY VAPOR)

NOT APPLICABLE TO THIS ORDER

SEE DRAWING NONE

IN APPEN

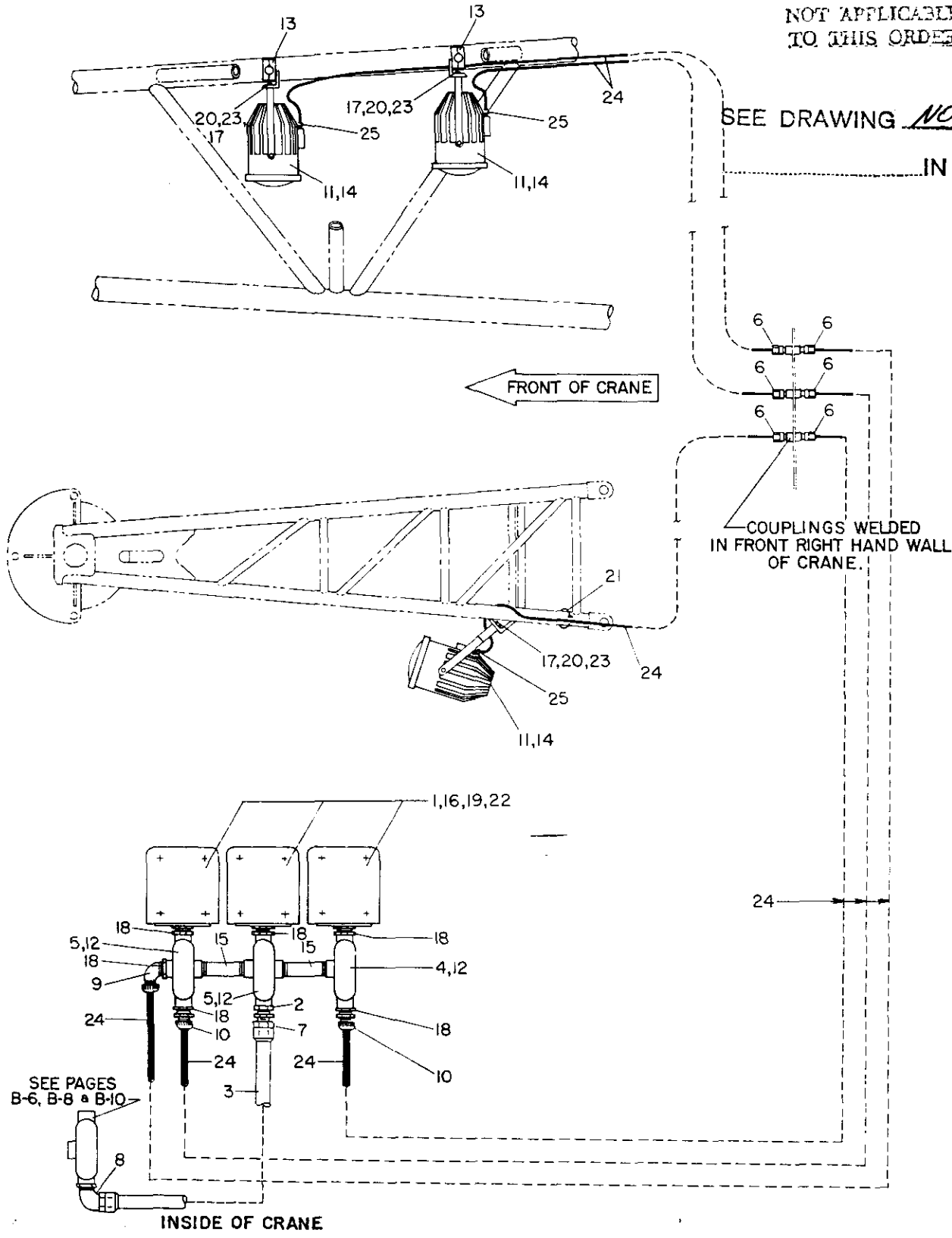


LT-160368

## BOOM LIGHT GROUP — EXPLOSION PROOF (MERCURY VAPOR)

| Item No. | Part No. | Description | No. Req'd. |
|---|---|---|---|
| 1 | 7801025 | BALLAST, Mercury Vapor Light | 3 |
| 2 | G-6800083-G | BUSHING, Standard M.I. Hex, 1" x 1/2", Galvanized | 1 |
| 3 | 7802404 | CONDUIT, Flexible Liquid-Tight, 1/2" | As Req'd. |
| 4 | 7802155 | CONDULET, Esco #T-39, With Cover | 1 |
| 5 | G-7802500 | CONDULET, Esco #X-39, With Cover | 2 |
| 6 | 7802235 | CONNECTOR, Crouse-Hinds #CGB-194, 1/2" x Straight | 6 |
| 7 | 7802400 | CONNECTOR, Esco #5232, 1/2" x Straight | 1 |
| 8 | 7802418 | CONNECTOR, Esco #5252, 1/2" x 90° | 1 |
| 9 | G-7802492 | CONNECTOR, Crouse-Hinds #CGE-395, 1" x 90° | 1 |
| 10 | G-7802494 | CONNECTOR, Crouse-Hinds #CGB-395, 1" x Straight | 2 |
| 11 | 7805159 | FIXTURE, Mercury Vapor Light | 3 |
| 12 | 7806053 | GASKET, Esco #Gask 1943-1" | 3 |
| 13 | 1615825 | HANGER, Boom Light | 2 |
| 14 | 7811011 | LAMP, Mercury Vapor | 3 |
| 15 | 6817149 | NIPPLE, Standard Pipe, 1" x 5-1/2" | 2 |
| 16 | 6300081 | NUT, 1/2" Hex, Cadmium Plated | 12 |
| 17 | 6300103 | NUT, 5/8" Hex, Cadmium Plated | 3 |
| 18 | 7813052 | NUT, 1" Conduit Lock | 6 |
| 19 | 7000303-11 | SCREW, Hex Head Cap, 1/2" x 1", Grade 5, Cadmium Plated | 12 |
| 20 | 7000396-11 | SCREW, Hex Head Cap, 5/8" x 1-3/4", Grade 5, Cadmium Plated | 3 |
| 21 | 7819050 | TYRAP | 40 |
| 22 | 7619050 | WASHER, 1/2" Regular Spring Lock, Cadmium Plated | 12 |
| 23 | 7619058 | WASHER, 5/8" Regular Spring Lock, Cadmium Plated | 3 |
| 24 | 7802422 | WIRE, Anixter VN-TC #2A-1403 | As Req'd. |
| 25 | 7802401 | CONNECTOR, Crouse-Hinds #CGBS-2013 | 3 |

NOT APPLICABLE TO THIS ORDER

## SHORT CATWALK (1612880)

NOT APPLICABLE TO THIS ORDER

SEE DRAWING NONE

IN APPENDIX

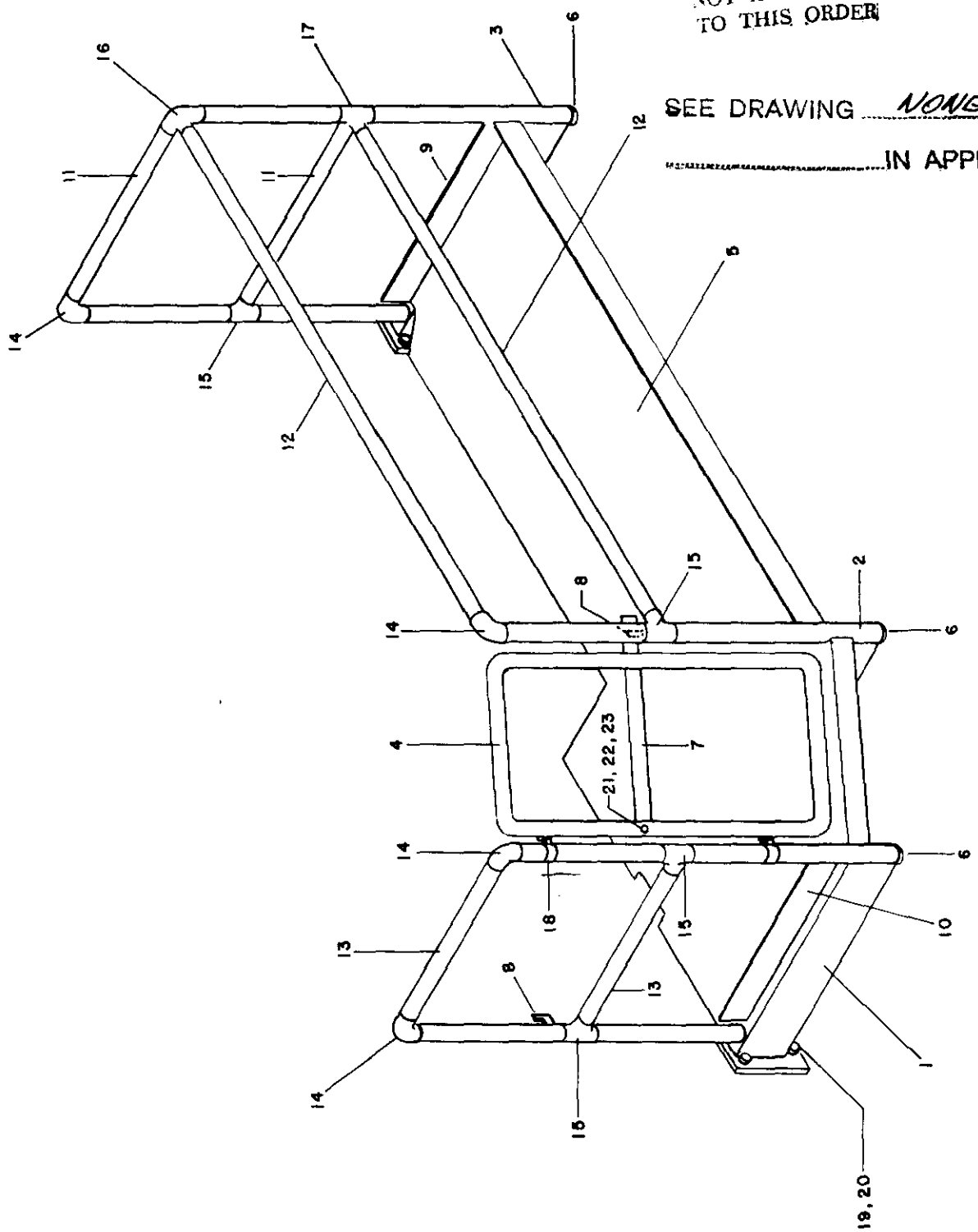


LT-160137

## SHORT CATWALK (1612880)

| Item No. | Part No. | Description | No. Req'd. |
|---|---|---|---|
| 1 | 1612881 | POST, Front Support | 1 |
| 2 | 1612882 | POST, Center Support | 1 |
| 3 | 1612883 | POST, Rear Support | 1 |
| 4 | 1612884 | GATE | 1 |
| 5 | 1612885 | FLOOR | 1 |
| 6 | 7810021 | KNOB | 5 |
| 7 | 1612886 | BAR, Gate | 1 |
| 8 | 1612888 | KEEPER, Gate | 2 |
| 9 | 3115000 | PLATE, Diamond Floor, 3/16" x 4" x 25" Long | 1 |
| 10 | 3115000 | PLATE, Diamond Floor, 3/16" x 4" x 24" Long | 1 |
| 11 | 6701241 | PIPE, N.S.D. T-632 Sch. 40, 1-1/2" x 25-5/8" Long | 2 |
| 12 | 6701241 | PIPE, N.S.D. T-632 Sch. 40, 1-1/2" x 6'-2-5/8" Long | 2 |
| 13 | 6701241 | PIPE, N.S.D. T-632 Sch. 40, 1-1/2" x 24-5/8" Long | 2 |
| 14 | 7804072 | ELBOW | 4 |
| 15 | 7819072 | TEE | 4 |
| 16 | 7804073 | ELBOW | 1 |
| 17 | 7819073 | TEE | 1 |
| 18 | 7805095 | FITTING, Eye | 2 |
| 19 | 7000440-11 | SCREW, Hex Head Cap, 3/4" x 2", Grade 5, Cadmium Plated | 9 |
| 20 | 7619066 | WASHER, 3/4" Regular Spring Lock, Cadmium Plated | 9 |
| 21 | 7000314-31 | SCREW, Hex Head Cap, 1/2" x 3-1/2", Stainless Steel | 1 |
| 22 | 7600032 | WASHER, 1/2" N. Type A, 1.062" O.D. | 2 |
| 23 | 6310081 | NUT, Flexloc #30FA813, 1/2"-13 UNC | 1 |

NOT APPLICABLE
TO THIS ORDER

SEE DRAWING NONE
IN APPENDIX

## LONG CATWALK (1613870)

NOT APPLICABLE
TO THIS ORDER

SEE DRAWING 1614826
IN APPENDIX

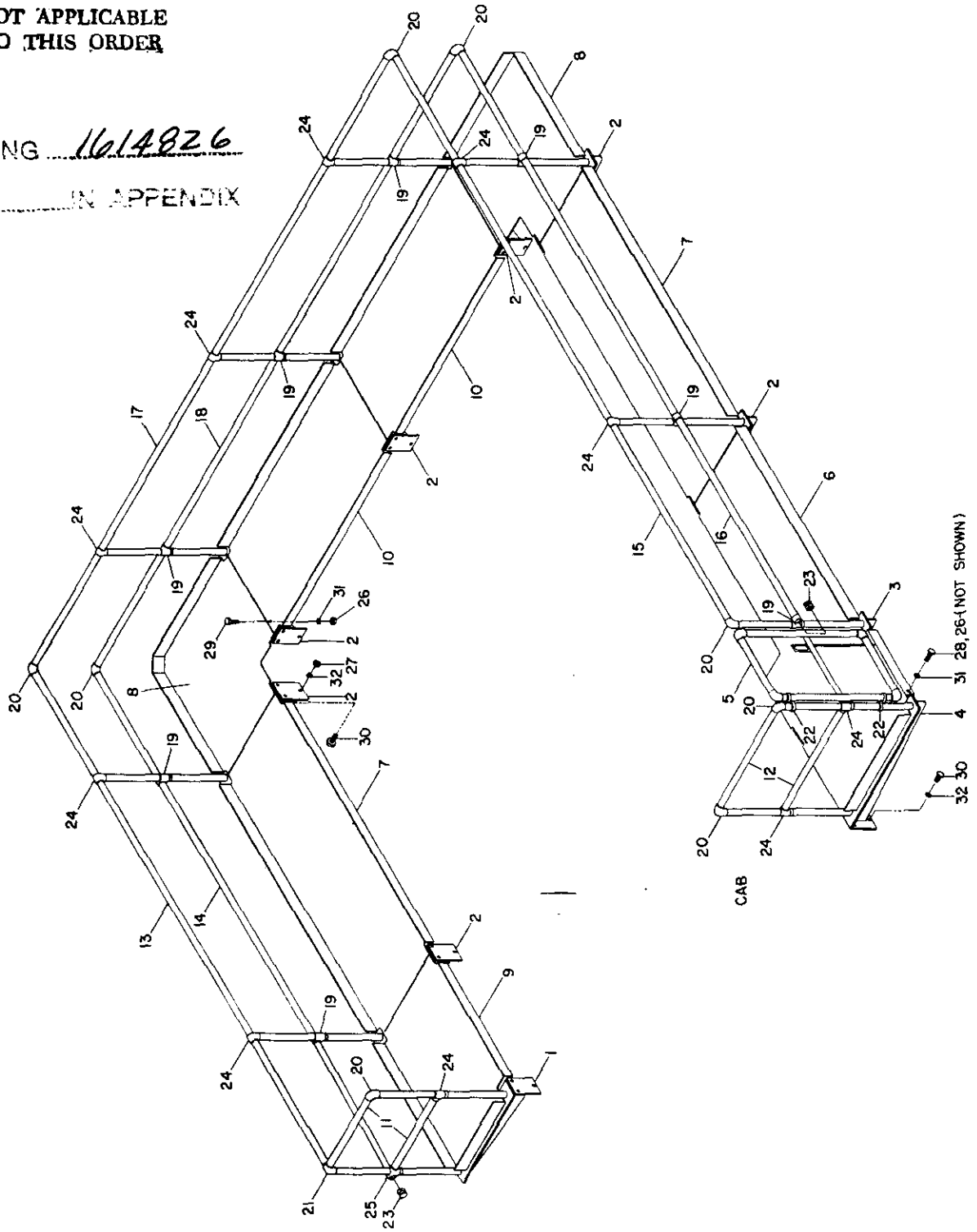


LT-160136

## LONG CATWALK (1613870)

| Item No. | Part No. | Description | No. Req'd. |
|---|---|---|---|
| 1 | 1613871 | SUPPORT | 1 |
| 2 | 1613872 | SUPPORT | 7 |
| 3 | 1613873 | SUPPORT | 1 |
| 4 | 1613874 | SUPPORT | 1 |
| 5 | 1613876 | GATE | 1 |
| 6 | 1613877 | FLOOR | 1 |
| 7 | 1613878 | FLOOR | 2 |
| 8 | 1613879 | FLOOR | 2 |
| 9 | 1613882 | FLOOR | 1 |
| 10 | 1613883 | FLOOR | 2 |
| 11 | 6701237 | PIPE, Standard Galvanized Sch. 40, 1-1/2" x 26" | 2 |
| 12 | 6701237 | PIPE, Standard Galvanized Sch. 40, 1-1/2" x 36-1/2" | 2 |
| 13 | 6701237 | PIPE, Standard Galvanized Sch. 40, 1-1/2" x 15'-6" | 1 |
| 14 | 6701237 | PIPE, Standard Galvanized Sch. 40, 1-1/2" x 15'10" | 1 |
| 15 | 6701237 | PIPE, Standard Galvanized Sch. 40, 1-1/2" x 17'-6-1/2" | 1 |
| 16 | 6701237 | PIPE, Standard Galvanized Sch. 40, 1-1/2" x 17-10-1/2" | 1 |
| 17 | 6701237 | PIPE, Standard Galvanized Sch. 40, 1-1/2" x 18'-10-1/2" | 1 |
| 18 | 6701237 | PIPE, Standard Galvanized Sch. 40, 1-1/2" x 19'-2-1/2" | 1 |
| 19 | 7802274 | CROSSOVER | 8 |
| 20 | 7804072 | ELBOW | 8 |
| 21 | 7804073 | ELBOW | 1 |
| 22 | 7805095 | FITTING, Eye | 2 |
| 23 | 7810021 | KNOB | 2 |
| 24 | 7819072 | TEE | 10 |
| 25 | 7819074 | TEE | 1 |
| 26 | 6300081 | NUT, 1/2" Hex, Cadmium Plated | 27 |
| 27 | 6300121 | NUT, 3/4" Hex, Cadmium Plated | 24 |
| 28 | 7000304-11 | SCREW, Hex Head Cap, 1/2" x 1-1/4", Grade 5, Cadmium Plated | 1 |
| 29 | 7000306-11 | SCREW, Hex Head Cap, 1/2" x 1-3/4", Grade 5, Cadmium Plated | 26 |
| 30 | 7000440-11 | SCREW, Hex Head Cap, 3/4" x 2", Grade 5, Cadmium Plated | 30 |
| 31 | 7619050 | WASHER, 1/2" Regular Spring Lock, Cadmium Plated | 27 |
| 32 | 7619066 | WASHER, 3/4" Regular Spring Lock, Cadmium Plated | 30 |

NOT APPLICABLE
TO THIS ORDER
SEE DRAWING 1614826
IN APPENDIX

## UPPER HANDRAIL (1612896)

NOT APPLICABLE
TO THIS ORDER

SEE DRAWING 1613885

IN APPENDIX

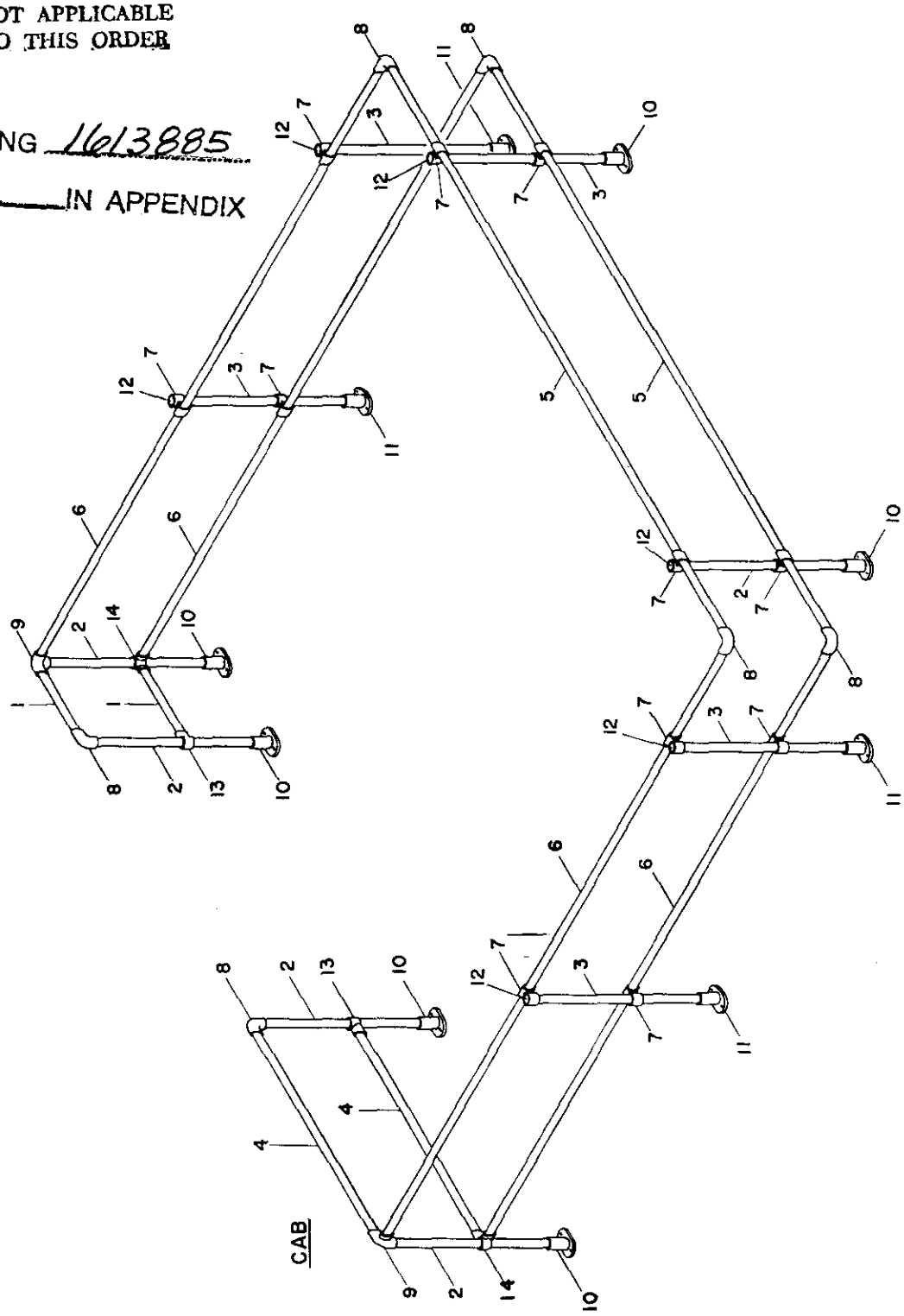


LT-160134

## UPPER HANDRAIL (1612896)

| Item No. | Part No. | Description | No. Req'd. |
|---|---|---|---|
| 1 | 6701237 | PIPE, Standard Galvanized Sch. 40, 1-1/2" x 20-1/2" | 2 |
| 2 | 6701237 | PIPE, Standard Galvanized Sch. 40, 1-1/2" x 41" | 5 |
| 3 | 6701237 | PIPE, Standard Galvanized Sch. 40, 1-1/2" x 43" | 5 |
| 4 | 6701237 | PIPE, Standard Galvanized Sch. 40, 1-1/2" x 55" | 2 |
| 5 | 6701237 | PIPE, Standard Galvanized Sch. 40, 1-1/2" x 12'-6" | 2 |
| 6 | 6701237 | PIPE, Standard Galvanized Sch. 40, 1-1/2" x 13'-0" | 4 |
| 7 | 7802274 | CROSSOVER | 12 |
| 8 | 7804072 | ELBOW | 6 |
| 9 | 7804073 | ELBOW | 2 |
| 10 | 7805107 | FLANGE, With:<br>2—6300081 NUT, 1/2" Hex, Cadmium Plated<br>2—7000306-11 SCREW, Hex Head Cap, 1/2" x 1-3/4", Cad. Plated<br>2—7619050 WASHER, 1/2" Regular Spring Lock, Cadmium Plated<br>2—G-7608067 WASHER, 1/2" Barseal | 6 |
| 11 | 7805107 | FLANGE, With:<br>2—6300081 NUT, 1/2" Hex, Cadmium Plated<br>2—7000304-11 SCREW, Hex Head Cap, 1/2" x 1-1/4", Cad. Plated<br>2—7619050 WASHER, 1/2" Regular Spring Lock, Cadmium Plated<br>2—G-7608067 WASHER, 1/2" Barseal | 4 |
| 12 | 7810021 | KNOB | 6 |
| 13 | 7819072 | TEE | 2 |
| 14 | 7819073 | TEE | 2 |

NOT APPLICABLE
TO THIS ORDER

SEE DRAWING 1613885

~~_____~~ IN APPENDIX

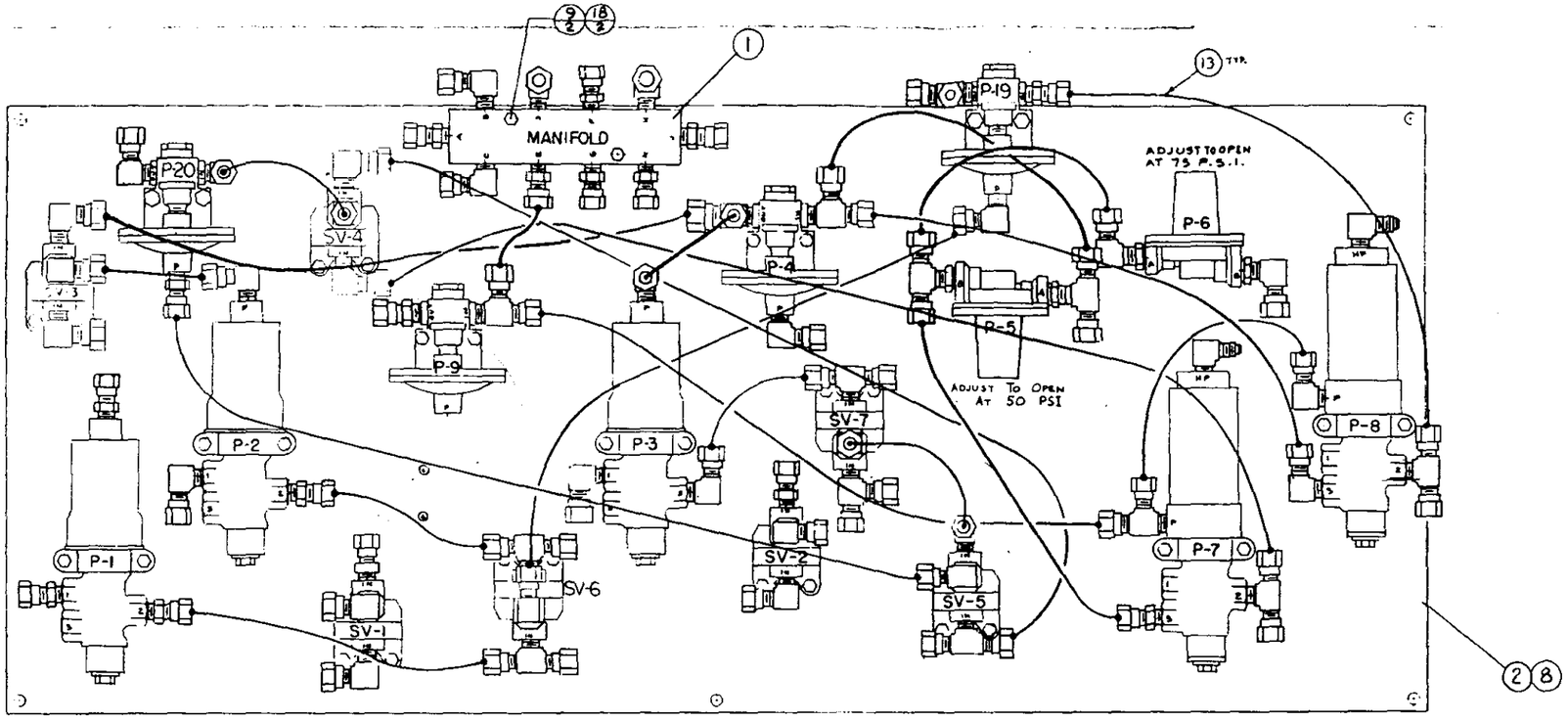


P-1 ____ 10/2 18/2 5/3 15
P-2, ____ 10/2 18/2 5 7/3 15
P-4 ____ 10/2 18/2 16 7 11/2
P-5 ____ 20/2 18/2 12/2 17 4/2
P-6 ____ 20/2 18/2 7/2 17 4/2
P-7 ____ 10/2 18/2 5 12 11 6 3
P-8 ____ 10/2 18/2 7/2 6 3 12
P-9 ____ 10/2 18/2 11 16 5
P-3 ____ 10/2 18/2 7/3 15
P-19 ____ 10/2 18/2 5 7 11 16
P-20 ____ 10/2 18/2 7/2 5 16

SV-1, 2 & 4 ____ 10/2 18/2 7/2 5 14
SV-3 ____ 10/2 18/2 7/3 14
SV-[illegible] ____ 10/2 18/2 7/2 14 12
SV-[illegible] ____ 10/2 18/2 12/2 7 14
SV-7 ____ 10/2 18/2 5 11 12 14

MANIFOLD:
A, E, F, G, K, [illegible] ____ 5
B, D, C ____ 7
H ____ 19

FAVOR CONSULTAR NO SISTEMA, POIS PODERÁ EXISTIR REVISÕES MAIS ATUALIZADAS.

| | | | |
|---|---|---|---|
| 20 | - | 7000105-11 | SCREW, H.H. CAP, 1/4" x 3/4" GR5, CAD. PLTD. |
| 19 | - | 7804219 | ELBOW, W/H #1469 |
| 18 | - | 7619033 | WASHER, REG. SPG. LOCK 1/4" CAD. PLTD. |
| 17 | - | G-7500338 | VALVE, |
| 16 | - | 7500142 | " , WILLIAMS 617A |
| 15 | - | 7500115 | " |
| 14 | - | 7500017 | " , 1/4" SHUTTLE P-54350-2 |
| 13 | - | 7819106-0 | TUBING 15'-0" |
| 12 | - | 7819145 | TEE, P/H 272NTA-4-4 |
| 11 | - | 7819142 | TEE, P/H 271NTA-4-4 |
| 10 | - | 7000108-11 | SCREW, H.H. CAP 1/4" x 1", GR.5, CD.PL |
| 9 | - | 7000111-11 | SCREW, H.H. CAP 1/4" x 1 1/2" GR.5, CD.PL. |
| 8 | - | 7817185 | RIVNUT, 1/4" GOODRICH #A25K-140 |
| 7 | - | 7804223 | ELBOW, W/H 1469 x 4 x 4K |
| 6 | - | 7804117 | ELBOW, W/H C5405 x 4 x 4 |
| 5 | - | 7802478 | CONNECTOR, W/H 1468 x 4 x 4K -1 |
| 4 | - | 6800031 | BUSHING, STD. M.I. HEX. 3/8 x 1/4" |
| 3 | C | 1607659 | VALVE, LOW. CHG. PRESS. SHUTDOWN |
| 2 | A | G-1613659 | PANEL |
| 1 | D | 1607668 | MANIFOLD, AIR |

MATERIAL

SPECIFICATIONS

VENDOR | HARDNESS

RESCRIPTION

ALLOWABLE MACHINE TOLERANCES UNLESS OTHERWISE SPECIFIED

SURFACE FINISH

FRACTIONS ± 1/64"

ANGLES ± 1/2°

SCALE 6" = 1'-0"

SUPERSEDES

ASSEMBLY NUMBER

ARMCO National Supply Company
Division of Armco Steel Corporation
Gainesville, Texas 76240

PANEL CPT., RH LOWER
05-435 A

DRAWN 4-6-82 | CHECKED 4-8-82 | BY EDS | SIZE A | PART NUMBER 1612007

| REV | DESCRIPTION | CHK'D BY | DATE | C N |
|---|---|---|---|---|
| | | | | |

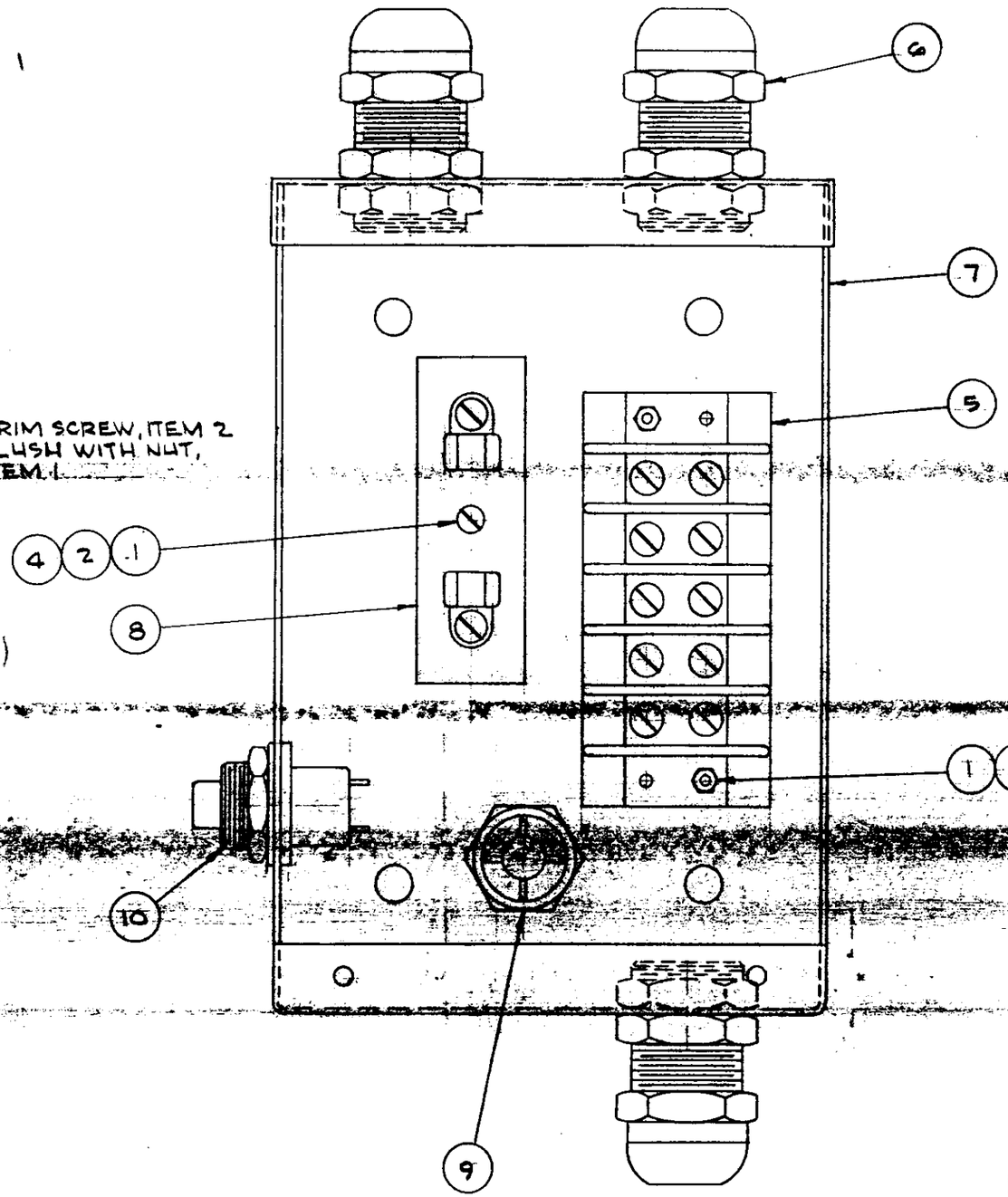


DOCUMENTO ILEGIVEL, ORIGINAL ENCONTRA-SE NA TI/UNBC.

FAVOR CONSULTAR NO SISTEMA, POIS PODERÁ EXISTIR REVISÕES MAIS ATUALIZADAS.

01

| ITEM | DWG. SIZE | PART NUMBER | DESCRIPTION | REQ'D |
|---|---|---|---|---|
| 10 | | 7818200 | SWITCH, W194WG | 1 |
| 9 | | 7817023 | RECTIFIER, 25 AMP | 1 |
| 8 | | [illegible] | [illegible] | [illegible] |
| 7 | B | 1607007-809 | BOX ONLY | 1 |
| 6 | D | [illegible] | [illegible] ARMCO 3219 | 2 |
| 5 | | 7801053 | BLOCK, BARRIER CINCH JONES #5-341 | 1 |
| 4 | | 7619017 | WASHER, #6 REG. SPR. LK. CD PL | 3 |
| 3 | | 7051068 | [illegible] #6-32 x 3/4" CD PL | 2 |
| 2 | | 7035068 | SCREW, #6-32 x 3/4" FLAT HD MACH. | 1 |
| 1 | | 6300004 | NUT, HEX #6-32 BRASS | 3 |

| ALLOWABLE MACHINE TOLERANCES UNLESS OTHERWISE SPECIFIED | MATERIAL | VENDOR | HARDNESS |
|---|---|---|---|
| FRACTIONS ± .015" ANGLES ± 0° 30' | | | |

ARMCO National Supply Company
Division of Armco Steel Corporation
Gainesville, TX

BOX CPT., ELECTRICAL

| SCALE | 12"=1'-0" | SUPERSEDES | DRAWN 2-4-82 | BY REL | C | PART NUMBER 1607007-810 |
|---|---|---|---|---|---|---|
| SURFACE FINISH RMS | ASSEMBLY NUMBER 1607007-600 | SUPERSEDED BY | CHECKED 2-6-82 | BY LDL | | |

1607007-810

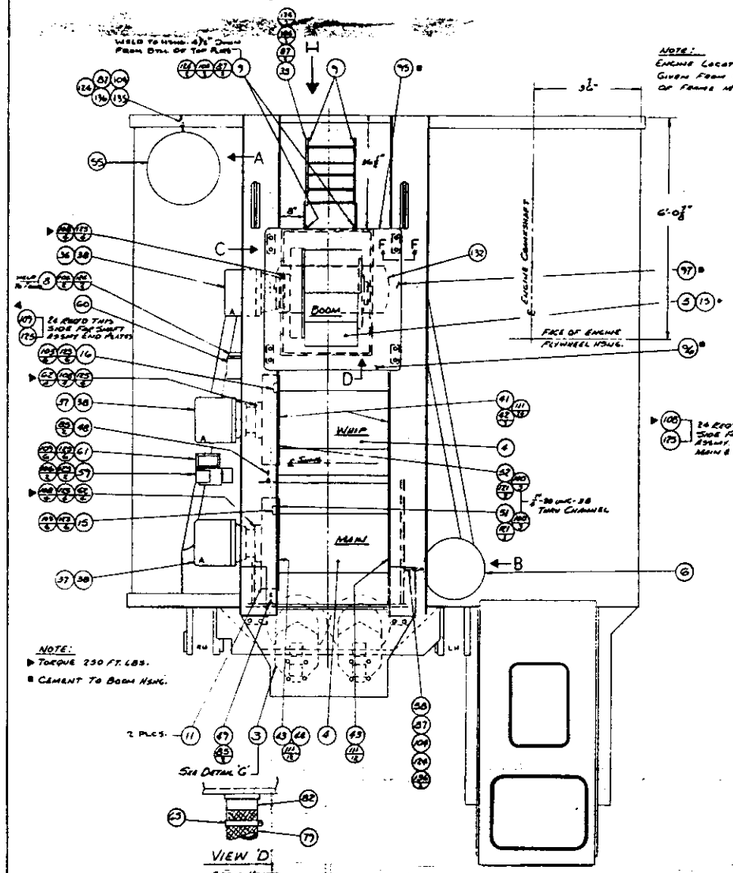


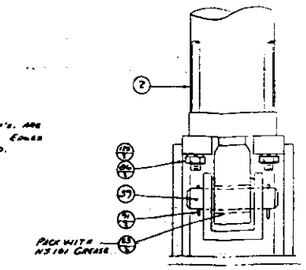


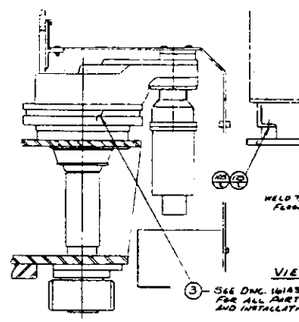


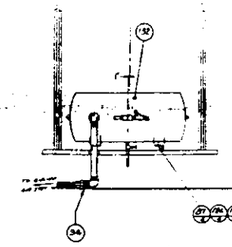


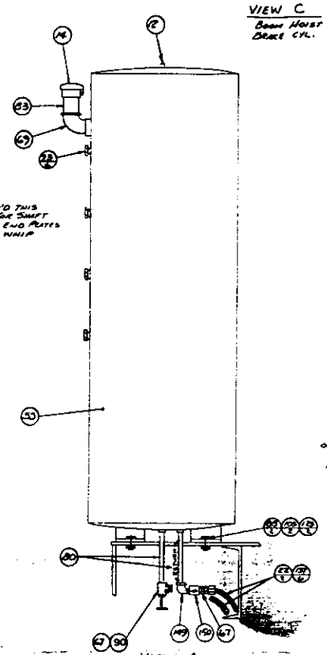


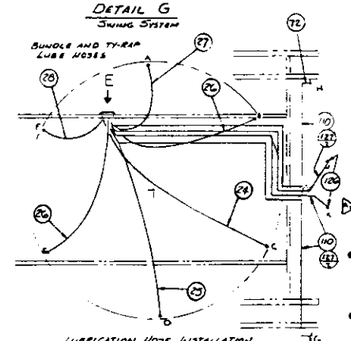


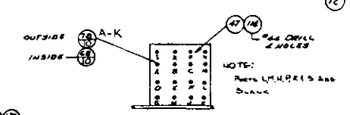


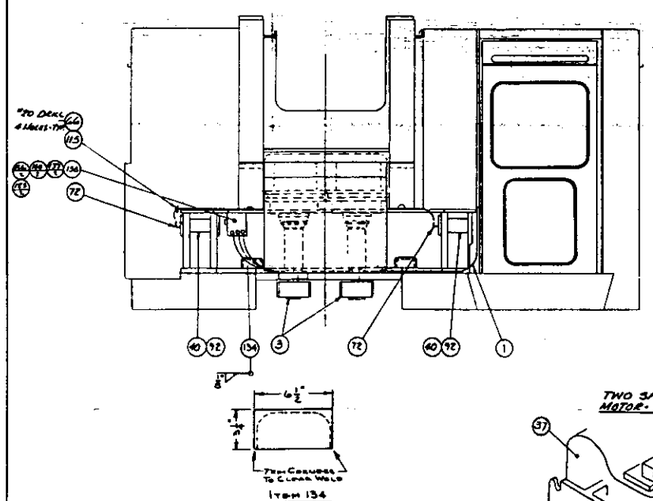


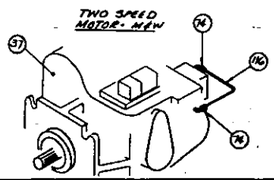


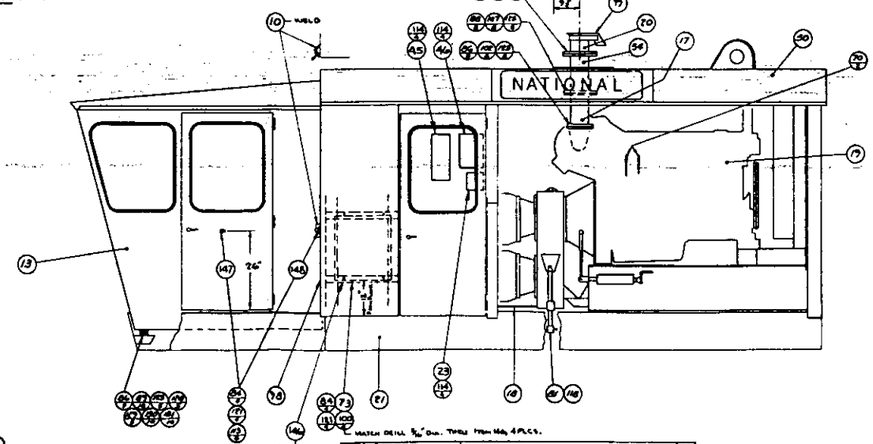





| | | | | |
|---|---|---|---|---|
| 137 | - | 7802351 | CLAMP, H1002-2048 | 6 |
| 136 | - | 7411062 | WASHER, TYPE A WIDE 5/8"x1 3/4"x C.P. | 18 |
| 135 | D | G-1611893 | BRACKET, FUEL TANK | 1 |
| 134 | | 3151011 | SHEET, STL. "11GA. 3 3/4" x 6 1/2" | 2 |
| 133 | - | 7000796-11 | SCREW, H.H. CAP GR 5 C.A. 3/8"x1 1/4" | 16 |
| 132 | B | G-1612766 | RECEIVER, AIR | 1 |
| 131 | - | 7411937 | WASHER, RD. SPR. LOCK C.P. 3/8" | 10 |
| 130 | - | 7000158-11 | SCREW, H.H. CAP GR 5 3/8"x1 1/2" C.P. | 10 |
| 129 | - | 7006312-11 | " " " " 7/16"x3" " | 5 |
| 128 | - | 78/2013 | MOUNT, PLATE, FOAM LOAD "ETP10-154 | 5 |
| 127 | - | 7800581 | FITTING, ADAPTER "AH-23 | 4 |
| 126 | - | 7800091 | ADAPTER, HOSE "8981-2-4S | 2 |
| 125 | - | 7411046 | WASHER, RD. SPR. LOCK C.A. 3/4" | 88 |
| 124 | - | 7411038 | " " " " " 5/8" | 12 |
| 123 | - | 7411059 | " " " " " 1/2" | 34 |
| 122 | - | 7411041 | " " " " " 3/8" | 10 |
| 121 | - | 7411033 | " " " " " 1/4" | 14 |
| 120 | - | G-7608063 | " BAR-SEAL "75390 3/8"x 3/4" | 8 |
| 119 | - | | | |
| 118 | - | 7500029 | VALVE, CRANK GLOBE 1" | 1 |
| 117 | - | 7819080 | TY-RAP, 8"x.30 NYLON "TY-868 | 10 |
| 116 | - | 7800442 | TUBING, 1/4"o.D. x.049" WALL 37F x 18" | 2 |
| 115 | - | 7178088 | SCREW, RD. HD. DRIVE TYPE U "8-1/2" | 8 |
| 114 | - | 7178053 | " " " " " 8-1/4" | 14 |
| 113 | - | 7435108-60 | " FLAT HD. MACH BRASS 1/4"x3/4" | 4 |
| 112 | D | 1613801 | WINDOW | 5 |
| 111 | - | 7407306-48 | SCREW, HEX SOC. FLAT HD. CAP 7/16"x1 1/4" | 48 |
| 110 | - | 6180304 | HOSE, ASSD. 3681-4 30"-0" | 1 |
| 109 | - | 7008443-11 | SCREW, H.H. CAP GR 5 C.P. 3/4"x2 3/4" | 30 |
| 108 | - | 7008442-11 | " " " " " 3/4"x1 1/2" | 36 |
| 107 | - | 7008438-11 | " " " " " 3/8"x 1" | 16 |
| 106 | - | 7008439-11 | " " " " " 3/8"x1 3/4" | 2 |
| 105 | - | 7008438-11 | " " " " " 3/8"x1 1/2" | 4 |
| 104 | - | 7008393-11 | " " " " " 5/8"x1 1/2" | 8 |
| 103 | - | 7008318-11 | " " " " " 7/16"x 1" | 12 |
| 102 | - | 7008387-11 | " " " " " 7/16"x 2" | 8 |

| | | | | |
|---|---|---|---|---|
| 101 | - | 7000208-11 | SCREW, H.H. CAP 5/8"x1" C.P. | 8 |
| 100 | - | 7000184-11 | " " " 7/16"x3/4" " | 10 |
| 99 | - | 381/198 | RUNCAP ANT-BRAIRD (OH) | 1 |
| 98 | - | 7811776 | RUBBER, MAP SPONGE 1"x24"x28'-0" | 1 |
| 97 | - | " | " " " 1"x6"x84" " | 1 |
| 96 | - | 7811772 | " " " 1/8"x3/8"x 38" | 1 |
| 95 | - | 7811710 | " " " 3/16"x2"x8'-0" | 1 |
| 94 | - | 7802358 | CONNECTOR, WYO CS805/E8 | 1 |
| 93 | - | 3815097 | PLUG, TRDG 60 SIGHT "M-38 | 6 |
| 92 | - | G-6502448-5 | PIN, COTTER, 5/8"x 6" CST | 2 |
| 91 | - | G-6501712-6 | " " 3/16"x11/2" " | 2 |
| 90 | - | 7500088 | VALVE, ANGLE AMERICAN "M 1/2" | 1 |
| 89 | - | 61000121 | NUT, HEX 5/16"-C.A. | 10 |
| 88 | - | 6500121 | " " 5/16" " | 18 |
| 87 | - | 61000103 | " " 5/8" " | 10 |
| 86 | - | 6500081 | " " 1/2" C.P. | 17 |

| | | | | |
|---|---|---|---|---|
| 85 | - | 6300042 | NUT, HEX 5/8" C.P. | 14 |
| 84 | - | 6300061 | " " 1/2" " | 8 |
| 83 | - | 7813021 | NIPPLE, BLWK. 2"x 4 1/2" TOE | 1 |
| 82 | - | 6825062 | " , KING CONE 37-93 2" | 1 |
| 81 | - | 6817076 | " , STD. PIPE 1"-31 | 1 |
| 80 | - | 6817056 | " " " 1"x 6" | 2 |
| 79 | D | G-100010 | HOSE, GATES "36 CITH 2"x 48" | 1 |
| 78 | - | 7805144 | FITTING, ALEMITE "M67-B | 10 |
| 77 | - | 7806037 | ELEMENT, FULL "HC-7540S-WJAN | 1 |
| 76 | - | 7806053 | " , SCHROEDER "K-3 | 2 |
| 75 | - | 7806036 | " " "H" # 32 RP-10C | 2 |
| 74 | - | 7803079 | ELBOW, "H" "7813 x 6 | 4 |
| 73 | D | H47670 | HEATER (120V) | 1 |
| 72 | - | 7804171 | ELBOW, ASSD "8064-11-X-63 | 2 |
| 71 | - | G-7803648 | CABLE, TACHOMETER | 1 |
| 70 | - | 3804122 | ELBOW, ASSD. "8024-6-6-63 | 2 |
| 69 | - | 6817016 | " , STD. M.I. STR. 2"x 36" | 1 |
| 68 | - | 7802296 | CONNECTOR, "H" "C2805 x 6x6 | 10 |
| 67 | - | 7802157 | " , ASSD. "2021-8-6-63 | 2 |
| 66 | - | 7802206 | CLIP, PARKER "3121-1-8 3/8" | 4 |
| 65 | - | 7801080 | CLAMP, BREESE "05-MO-M405 | 2 |
| 64 | | | | |
| 63 | - | 28-1120 | BEARING, TABR. "B-1816 | 2 |
| 62 | D | 1612735 | WASHER | 8 |
| 61 | D | 1614931 | VALVE | 1 |
| 60 | B | 1612242 | " | 1 |
| 59 | A | 1607705 | SUBPLATE | 1 |
| 58 | D | G-1612832 | BRACKET | 1 |
| 57 | D | G-1612830 | CAVER | 1 |
| 56 | D | 1610828 | U-BOLT | 1 |
| 55 | A | 1612840 | TANK | 1 |
| 54 | A | 1613937 | SUPPORT | 1 |

| | | | | |
|---|---|---|---|---|
| 53 | E | H612009-800 | ELECTRICAL WIRING | 1 |
| 52 | C | 1612859 | SHIELD, RAIN | 1 |
| 51 | C | 1612838 | " | 1 |
| 50 | E | 1612800 | SHEET METAL | 1 |
| 49 | D | 1610844-5 | ROD | 1 |
| 48 | D | 1601066-3 | " | 1 |
| 47 | C | G-2407243 | PLATE, LUBE | 1 |
| 46 | C | G-2407276 | PLATE, MAINT. CHECK | 1 |
| 45 | C | G-2407275 | " , NAME | 1 |
| 44 | C | 1612320 | " , WEAR | 1 |
| 43 | C | 1612579 | " , " | 3 |
| 42 | C | 1610548 | " , " | 3 |
| 41 | C | 1610544 | " , " | 1 |
| 40 | C | 1613747 | PIN | 2 |
| 39 | C | 1610833 | " | 1 |
| 38 | C | 2610020-861 | PACKING, O RING | 8 |
| 37 | C | G-1614230 | MOTOR "HM TWO SPEED | 2 |
| 36 | D | 1612705 | " , BOOM HOIST | 1 |
| 35 | C | 1612739 | LADDER | 1 |
| 34 | A | G-1614252 | WLD. PLUMBING, CONTROL & COOLER | 1 |
| 33 | F | G-1614256 | " " , SENSOR | 1 |
| 32 | E | G-1614254 | " " , MOTOR & PUMP | 1 |
| 31 | E | G-1614279 | " " , HI SPEED | 1 |
| 30 | B | 2407230-011 | PLATE, LOAD CAR API 120 Boom | 1 |
| 29 | A | 03-1612008-809 | INSTALLATION, BALLAST | 1 |
| 28 | D | 1612829 | HOSE, 16" x 82" | 1 |
| 27 | D | 1612828 | " , 1/2" x 68" | 1 |
| 26 | D | 1612827 | " , 1/2" x 60" | 2 |
| 25 | D | 1612891 | " , 1/2" x 7'-6" | 1 |
| 24 | D | 1612890 | " , 1/2" x 7'-11" | 1 |
| 23 | C | G-2407240 | PLATE, API-2C | 1 |
| 22 | D | 1612984 | HOSE, 3/8" x 16'-2" | 2 |

DOCUMENTO ILEGIVEL, ORIGINAL ENCONTRA-SE NA TI/UNBC.

H612009-100

| | | | | |
|---|---|---|---|---|
| 21 | C | G-1611603 | FRAME | 1 |
| 20 | C | G-1612329 | FLANGE | 1 |
| 19 | E | 16/13540 | ENGINE CAT, CAT 3408 DITA | 1 |
| 18 | B | 1613922 | COVER | 1 |
| 17 | C | G-1613988 | CONNECTOR | 1 |
| 16 | C | 1612881 | CLAMP, 1" WIRE ROPE | 1 |
| 15 | C | H10346 | " " 3/8" " " | 2 |
| 14 | D | H10735 | CAP | 1 |
| 13 | E | H612009-600 | CAB | 1 |
| 12 | - | 6879005 | PLUG, 3/4in. CROSS Recess. 1" | 1 |
| 11 | B | 1612844 | BRAKE GROUP | 1 |
| 10 | D | 1612837 | BRACKET, DOOR STOP | 1 |
| 9 | D | 1612786 | " , FRAME | 4 |
| 8 | D | 1612871 | " , VALVE | 1 |
| 7 | D | 1610887 | " , 3/4 in. PIPE SUPPORT | 1 |
| 6 | B | H10739 | ASSEMBLY, HYD TANK | 1 |
| 5 | A | G-1613860 | " , BOOM HOIST HSNG. | 1 |
| 4 | A | G-1612813 | " , HOIST SHAFT | 2 |
| 3 | A | 1614320 | " , SWING SYSTEM | 1 |
| 2 | A | 1610880 | " , BRAKE CYL. | 1 |
| 1 | A | G-1614267 | AIR PIPING | 1 |

| | | | | |
|---|---|---|---|---|
| 150 | - | 7500112 | VALVE, CHECK | 1 |
| 149 | - | 6825004 | ELBOW, STD M.I. STR. 90° 1/2" | 1 |
| 148 | - | G-7805008-2 | PLUNGER | 1 |
| 147 | - | G-7805008-1 | SOCKET | 1 |
| 146 | - | 3701124 | PLAT, HR 1010 14"x 2"x 26" L6 | 2 |
| 145 | | | | |
| 144 | | | | |
| 143 | | | | |
| 142 | D | 7807686 | HEATER, HYD TANK | 1 |
| 141 | D | 7807686 | HEATER, BASE, BLANK (REPLACES EXISTING) | 1 |
| 140 | - | G-1608047 | WIRING, BASE-SEAL 7/32" | 2 |
| 139 | - | 7008304-11 | SCREW, H.H. CAP 7/16"x1 3/4 GR. 5 C.A. | 2 |
| 138 | A | G-1613670 | ASSY., BOOM SINGLE LIMITER | 1 |

NOTE:
1. ITEMS 75,76,77 SEE FOR REPLACEMENTS AFTER PRODUCTION TEST.
2. * CREDIT BACK TO STOCK, QTY. 1 1612081 CLAMP FROM BOOM HOIST SHAFT.
3. @ NOT SHOWN
4. ▲ STRAND CAPABILITY: 113,400 # @ 30 Ft. Rad. WITH 120 Ft. BOOM.

ADDED 12-9-82

| | | | |
|---|---|---|---|
| Rev. | Date | By | Chk'd |
| | 5-4-82 | EDS | |
| | 5-7-82 | JC | |

POWER ASSEMBLY, 05-495 DP
W/Air Controls Cat 3408 DITA

| | | | |
|---|---|---|---|
| Scale | 1/4"=1'-0" | Drawing No. | E-1612009-100 |
| Survey Chart No. | 5-5-8 | | |

VIEW A
REAR VIEW OF CAB

MAIN

BOOM

SWING

FRONT WIPER DETAIL

JUNCTION BOX COVER DETAIL

OUTSIDE VIEW OF SIDE MANIFOLD

FOOT THROTTLE

FOOT BRAKE

SECTION B-B

BOOM CONTROL FOOT PEDAL

MANIFOLD IN REAR WALL

612009-600

DOCUMENTO ILEGIVEL, ORIGINAL ENCONTRA-SE NA TI/UNBC.

FAVOR CONSULTAR NO SISTEMA, POIS PODERA EXISTIR REVISÕES MAIS ATUALIZADAS.

| NO. | REVISIONS | CHK'D BY | DATE | C.O. # |
|---|---|---|---|---|
| A | 1. WAS 7811008 | JK | 5-4-84 | 82-281 |
| B | 2) Was Qty 7 | JK | 5-17-84 | 83-1266 |
| | 3) Was Qty 9 | | | |
| | 4) Was Qty 13 | | | |
| | 5) Was Qty 9 | | | |
| | 6) Was Qty 13 | | | |
| | 7) Was Qty 31 | | | |
| | 8) Was Qty 1 | | | |
| | 9) Was Qty 1 | | | |
| | 10) Adds G-7802495 Qty 1 | | | |
| | 11) Was G-7802495 Qty 1 | | | |
| | 12) Adds Was "H" 7808471 | | | |
| | 13) Adds Was "K" 7822021 | | | |
| | 14) Adds 18778 A | | | |
| | 15) Adds 3 Shts (1) Lbl Dwg | | | |
| | 16) Adds Was "B" 7802413 | | | |
| C | 1. DELETE L81108-6 (1) | DK | 6-11-84 | 82-315 |
| | 2. " 4841048-6 (1) | | | |
| | 3. " 7815197-005 (1) | | | |
| | 4. " 7817662-005 (1) | | | |
| | 5. " G-7802494 (1) | | | |
| | 6. ADD "2 REF" | | | |
| | 7. " " | | | |
| | 8. ADD WIRE "B" REF | | | |
| D | 1. WAS QTY. 16 | JK | 7-7-84 | 82-412 |
| | 2. WAS QTY. 14 | | | |
| | 3. WAS QTY. 25 | | | |
| | 4. WAS QTY. 2 | | | |
| | 5. WAS QTY. 2 | | | |
| | 6. WAS QTY. 2 | | | |
| | 7. DELETE 78131086 | | | |
| | 8. DELETE 7802534 | | | |
| | 9. WAS TO TRANSFORMER | | | |
| | 10. WAS FROM TRANSFORMER TO GLOW PLUG | | | |

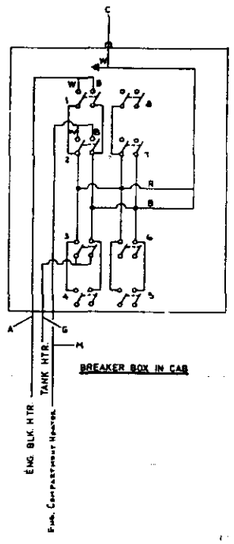


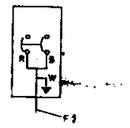


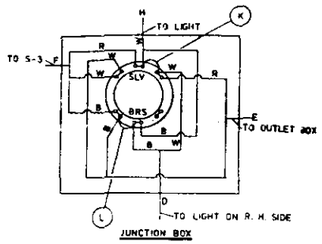


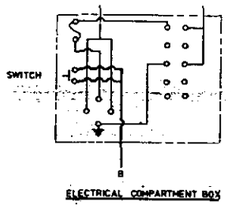


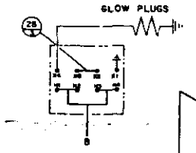


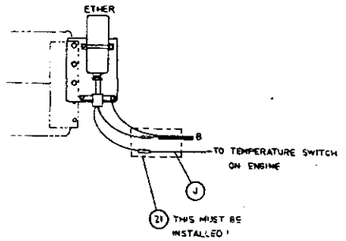


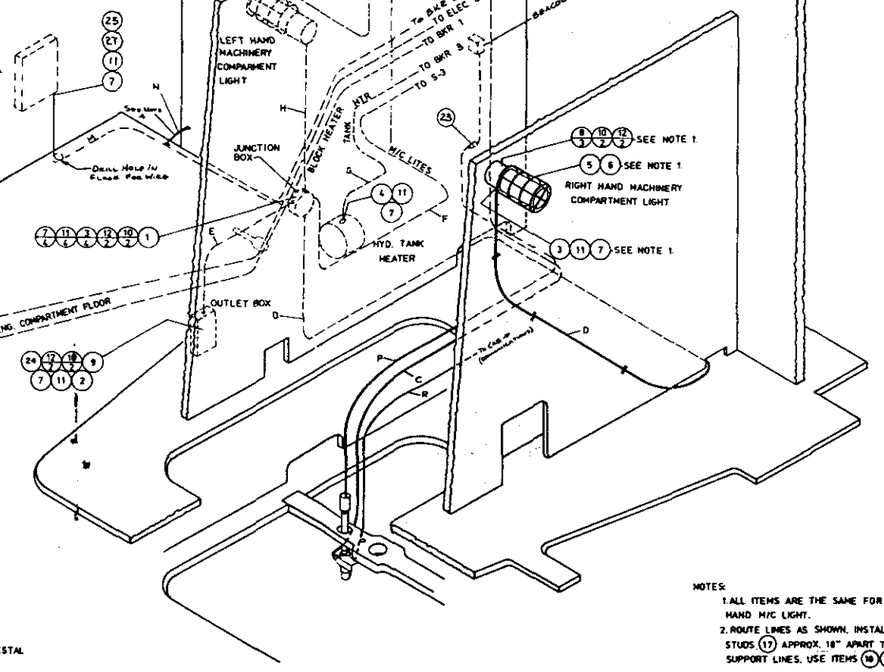


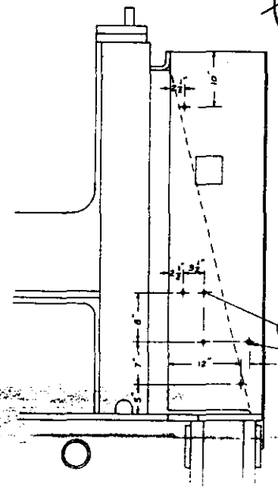


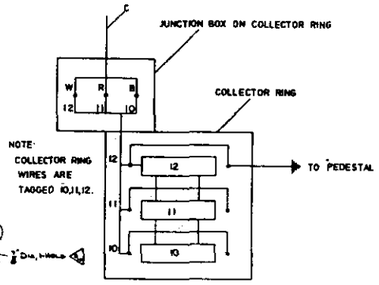


PAVOR CONSULTAR NO SISTEMA, POIS PODERÃO EXISTIR REVISÕES MAIS ATUALIZADAS.

**DOCUMENTO ILEGIVEL, ORIGINAL ENCONTRA-SE NA TI/UNBC.**

| REF. | | | FROM | | TO | | CONNECTOR TYPE & SIZE | COLOR | PART NO. |
|---|---|---|---|---|---|---|---|---|---|
| | R | COLL. RING 1 THRU 7 | - | CAB COMM. | - | ITT 180A T Conn. | AS REQ'D. | | 7802548 |
| | P | BEACON LIGHT JUNCTION BOX | 7819094 | COLL. RING 12 | 7818271 | TSGA-4 14-3 | | WHITE | 7802423 |
| | | | " | COLL. RING 9 | " | | | RED | |
| | | | " | COLL. RING 8 | " | | | BLACK | |
| | N | CAB | 7819104 | FRAME | 7819104 | #10 GA | | WHITE | 78220981 |
| | M | BKR 2 | - | ENG. COMP HEATER | 7819104 | DSGA-9 11-2 | | BLACK | 7802471 |
| | | | | | 7819104 | | | WHITE | |
| | L | (SEE J BOX) | 7819094 | (SEE J BOX) | 7819094 | 14 GA. | | BLACK | 7822059 |
| | K | (SEE J BOX) | 7819094 | (SEE J BOX) | 7819094 | 14 GA. | | WHITE | 7822063 |
| | J | ETHER AID | 7822026 | TEMP SWITCH | 7822026 | 12 GA. | | BLACK | 7822065 |
| | H | JUNCTION BOX | 7819094 | L.H. M/C LIGHT | 7819094 | DSGA-4 14-2 | | BLACK | G-7802495 |
| | | | 7819094 | | 7819094 | | | WHITE | |
| | G | BKR 3 | - | TANK HEATER | 7819095 | DSGA-4 14-2 | | BLACK | G-7802495 |
| | | | - | | 7819095 | | | WHITE | |
| | F | SWITCH 3 | 7819095 | JUNCTION BOX | 7819094 | TSGA-4 14-3 | | RED | 7802423 |
| | | " 3 | 7819096 | | 7819094 | | | BLACK | |
| | | " 3 GND | 7819095 | | 7819094 | | | WHITE | |
| | E | JUNCTION BOX | 7819094 | OUTLET BOX | 7819094 | TSGA-4 14-3 | | BLACK | 7802423 |
| | | | 7819094 | | 7819094 | | | WHITE | |
| | | | 7819094 | | 7819094 | | | RED | |
| | D | JUNCTION BOX | 7819094 | R.H. M/C LIGHT | 7819094 | DSGA-4 14-2 | | BLACK | G-7802495 |
| | | | 7819094 | | 7819094 | | | WHITE | |
| REF. | C | BREAKER BOX | - | COIL RING 12 | 7818271 | TSGA-50-3 3-3 | | WHITE | 7802470 |
| | | | - | " " 11 | " | | | RED | |
| | | | - | " " 10 | " | | | BLACK | |
| | B | ELEC. COMP BOX | 7819097 | ETHER AID | 7822025 | DSGA-4 14-2 | | BLACK | G-7802495 |
| | | | 7819097 | GROUND | 7819102 | | | WHITE | |
| | A | BKR 1 | - | ENG. BLOCK HEATER | 7819104 | DSGA-9 11-2 | | BLACK | 7802471 |
| | | | | | 7819104 | | | WHITE | |

| | | | |
|---|---|---|---|
| 29 | - 7818270 | SPLICE | 3 |
| 27 | - 78130145 | NUT, CONDUIT LOCK 1/2" | 1 |
| 26 | - | | |
| 25 | - 7801151 | BUSHING, CONDUIT ESCO 122-1/2" | 1 |
| 24 | D 7862242-002 | PLUG, PIPE - BRASS 3/8" PAULUHN | 1 |
| 23 | - 7802512-004 | CONNECTOR, HEYCO BULKHEAD 3219 | 1 |
| 22 | | | |

(17)

16112009-800 REV D

| | | | | |
|---|---|---|---|---|
| SEE NOTE #3 | 21 | - 7819083 | TUBING, FLEX. ALPHA WIRE #FIT-105 3/4" = 6" LG. | 2 |
| | 20 | - 7802083 | TY-RAP | 17 |
| | 19 | - 7621018 | WASHER, TYPE A NARROW 1/4" = .625" O.D. | 17 |
| | 18 | - 6300041 | NUT, HEX 1/4" CAD. PLTD. | 19 |
| SEE NOTE #2 | 17 | - 7818689 | STUD, WELD | 22 |
| | 16 | D | | |
| | 15 | D | | |
| | 14 | - | | |
| | 13 | - | | |
| | 12 | - 7819033 | WASHER, 1/4 REGULAR SPRING LOCK CAD PLT. | 10 |
| | 11 | D 7819662-002 | TUBE, MALE TERMINAL PAULUHN #1502-M211/2"-1 | 10 |
| | 10 | - 7000905-11 | SCREW, HEX HD. CAP 1/4" = 5/8" GR.5 CAD PLT. | 10 |
| | 9 | D 7817198 | RECEPTACLE, WATERPROOF PAULUHN #261AA320 RECEPT | 1 |
| | 8 | D 7815242-003 | PLUG, PIPE BRASS 1" PAULUHN #362 | 6 |
| | 7 | D 7815109-002 | PACKING, MOLDED CABLE 11/2" OCEANIC #9902 | 10 |
| | 6 | 1 7811001 | LAMP, COMPARTMENT LIGHT FIXTURE | 2 |
| | 5 | 1 7808043-005 | FIXTURE, COMPARTMENT LIGHT PAULUHN #755 AG14 TERM | 2 |
| | 4 | - 6800124 | BUSHING, STD. H.T. HEX. 1-1/2" = 1/2" | 2 |
| | 3 | - 6800083-8 | BUSHING, STD PIPE HEX. 1" = 1/2" BRASS | 6 |
| | 2 | - 6800092-8 | BUSHING, STD PIPE HEX. 3/4" = 1/2" BRASS | 1 |
| | 1 | D 7801233-002 | BOX, JUNCTION PAULUHN #571 A (8 TERM) | 1 |

NOTES:
1. ALL ITEMS ARE THE SAME FOR LEFT HAND M/C LIGHT.
2. ROUTE LINES AS SHOWN. INSTALL WELD STUDS (17) APPROX. 18" APART TO SUPPORT LINES. USE ITEMS (18) (19) (20)
3. USE ON SPLICES BETWEEN CABLE "B", SOLENOID AND TEMP. SWITCH.
4. ATTACH GROUND WIRE "N" TO CAB AND FRAME BY DRILLING (2) 3/16" HOLES TO SUIT, USE 2-EACH OF ITEM 10, 12 & 18.

| | |
|---|---|
| | WIRING ELECTRICAL DS-435, 120V |

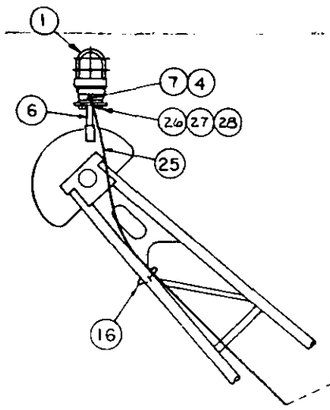


SHEAVE EXTENSION

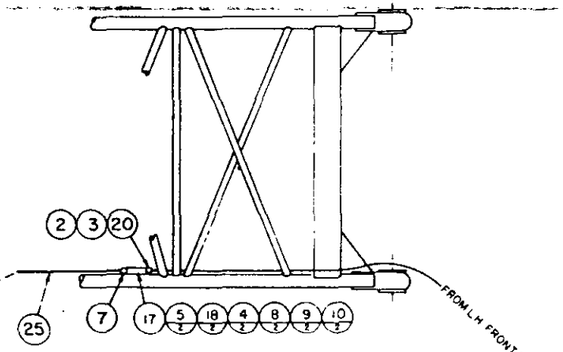


BOOM BASE

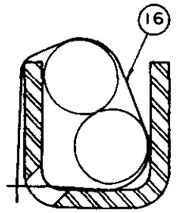


CABLE TRAY

| BOOM LENGTH | LENGTH OF ITEM 25 |
|---|---|
| 60' | 75' |
| 80' | 95' |
| 100' | 115' |
| 120' | 135' |
| 140' | 155' |
| 150' | 175' |

| PREFIX | |
|---|---|
| 01 | GANTRY & BOOM BEACONS 120VAC |
| 02 | GANTRY & BOOM BEACONS 240VAC |
| 03 | GANTRY BEACON ONLY 120VAC |
| 04 | GANTRY BEACON ONLY 240VAC |
| 05 | BOOM BEACON ONLY 120VAC |
| 06 | BOOM BEACON ONLY 240VAC |

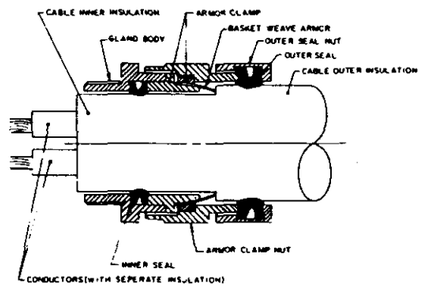


TYPICAL GLAND AND & CABLE INSTALLATION
ITEMS 7

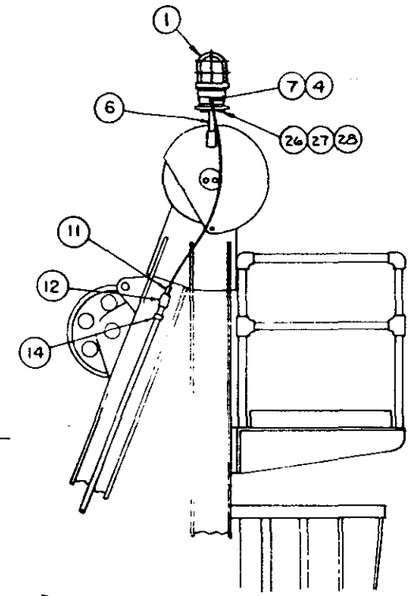


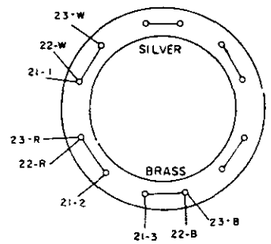


JUNCTION BOX ON
LEFT HAND FRONT PANEL

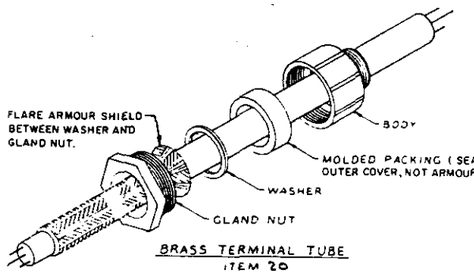


BRASS TERMINAL TUBE
ITEM 20

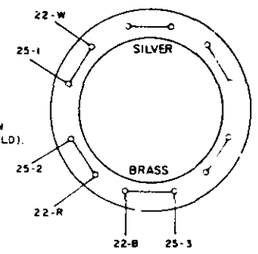


JUNCTION BOX ON
BOOM BASE

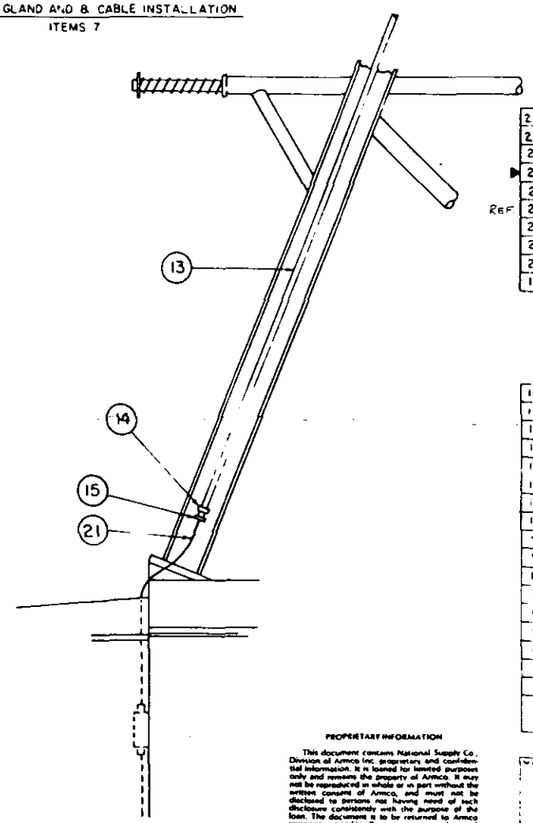


▶ REF. ONLY SEE CRANE CPT.

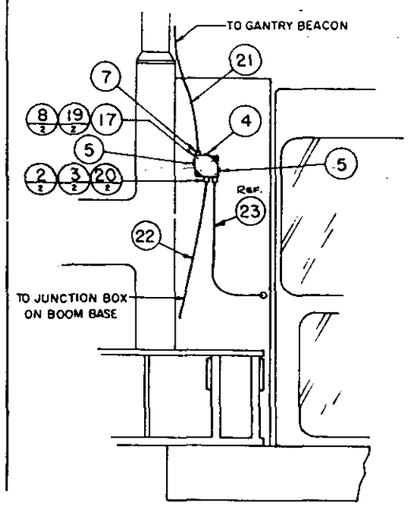


01-
02-

LEFT HAND FRONT PANEL

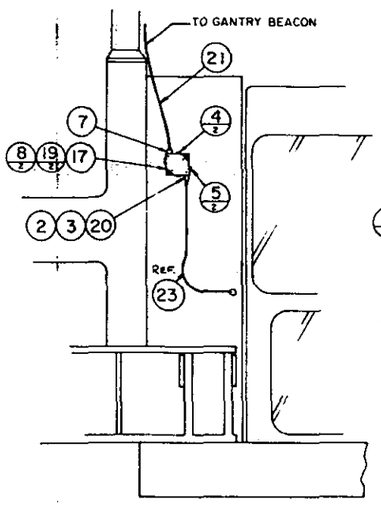


03-
04-

LEFT HAND FRONT PANEL

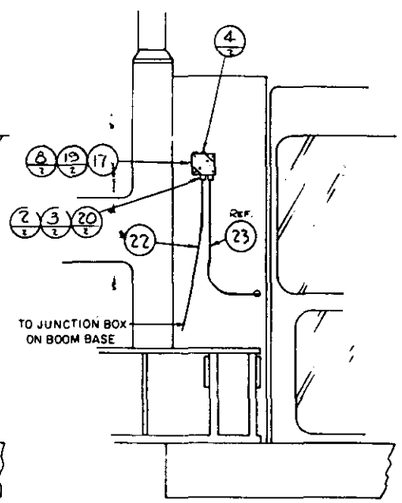


05-
06-

LEFT HAND FRONT PANEL

| | | | | | | | | |
|---|---|---|---|---|---|---|---|---|
| 28 | - | 7619037 | WASHER, SPRING LOCK 5/16" CP | 8 | 8 | 4 | 4 | 4 | 4 |
| 27 | - | 6300051 | NUT, HEX 5/16" CP | 8 | 8 | 4 | 4 | 4 | 4 |
| 26 | - | 7000157-11 | SCREW, H.H. CAP 5/16"x1" GR5 CP | 8 | 8 | 4 | 4 | 4 | 4 |
| 25 | D | 7802469-001 | CABLE, PIRELLI 6583 TQ, 3 CORE | SEE TABLE | | | | | |
| 24 | - | | | | | | | | |
| REF 23 | - | 7802423 | CABLE, ANIXTER TSGA-4 | 15' | 15' | 15' | 15' | 15' | 15' |
| 22 | - | 7802555 | CABLE, ANIXTER TSS-4 | 20' | 20' | - | - | 20' | 20' |
| 21 | D | 7802469-001 | CABLE, PIRELLI 6583 TQ, 3 CORE | 35' | 35' | 35' | 35' | - | - |
| 20 | D | 7819662-002 | TUBE, MALE TERMINAL, 1/2" | 3 | 3 | 1 | 1 | 3 | 3 |
| 19 | - | 7000105-11 | SCREW, H.H. CAP, 1/4" X 5/8" CAD. PL. | 2 | 2 | 2 | 2 | 2 | 2 |

1612009-801

(108)

| | | | | | | | | |
|---|---|---|---|---|---|---|---|---|
| 18 | - | 7000108-11 | SCREW, H.H. CAP, 1/4" X 1" CAD. PL. | 2 | 2 | - | - | 2 | 2 |
| 17 | D | 7801234-003 | BOX, JUNCTION WATERTIGHT | 2 | 2 | 1 | 1 | 2 | 2 |
| 16 | - | 7819048 | TY-RAP | 12 | 12 | - | - | 12 | 12 |
| 15 | - | 7801151 | BUSHING, ESCO CONDUIT 1/2" | 1 | 1 | 1 | 1 | - | - |
| 14 | - | 7818184 | SUPPORT, EDGE TYPE CONDUIT, ET-1/2" | 3 | 3 | 3 | 3 | - | - |
| 13 | - | 7802145 | CONDUIT, RIDGID ALUMINUM 1/2" TBE | 20' | 20' | 20' | 20' | - | - |
| 12 | - | 6806004-G | COUPLING, STD. PIPE, GALV. 1/2" | 1 | 1 | 1 | 1 | - | - |
| 11 | - | 7802528 | CONNECTOR, C/H CGB-195 1/2" | 1 | 1 | 1 | 1 | - | - |
| 10 | - | 7621016 | WASHER, TYPE 1/4" CAD. PL. | 2 | 2 | - | - | 2 | 2 |
| 9 | - | 6300041 | NUT, HEX. 1/4" CAD. PL. | 2 | 2 | - | - | 2 | 2 |
| 8 | - | 7619033 | WASHER, REG. SPG. LK., 1/4" CAD. PL | 4 | 4 | 2 | 2 | 4 | 4 |
| 7 | D | 7806042-008 | GLAND, HAWKE 501/453 OX 3/4" NPT | 4 | 4 | 2 | 2 | 2 | 2 |
| 6 | C | 1614834 | SUPPORT, BEACON | 2 | 2 | 1 | 1 | 1 | 1 |
| 5 | D | 7815242-003 | PLUG, PIPE BRASS 1" | 4 | 4 | 2 | 2 | 2 | 2 |
| 4 | D | 7815242-002 | PLUG, PIPE BRASS 3/4" | 5 | 5 | 3 | 3 | 6 | 5 |
| 3 | D | 7815199-002 | PACKING, MOLDED CABLE 1/2" | 3 | 3 | 1 | 1 | 3 | 3 |
| 2 | - | 6800062-8 | BUSHING, PARKER PTR-8 3/4" X 1/2" | 3 | 3 | 1 | 1 | 3 | 3 |
| 1 | D | 7811097-008 | LIGHT, BEACON 240V (RED) | - | 2 | - | 1 | - | 1 |
| | | 7811097-003 | LIGHT, BEACON 120V (RED) | 2 | - | 1 | - | 1 | - |
| | | | | 01- | 02- | 03- | 04- | 05- | 06- |

FAVOR CONSULTAR O SISTEMA, POIS PODERÁ EXISTIR REVISÕES MAIS ATUALIZADAS

PROPRIETARY INFORMATION

This document contains National Supply Co. Division of Armco Inc. proprietary and confidential information. It is loaned for limited purposes only and remains the property of Armco. It may not be reproduced in whole or in part without the written consent of Armco, and must not be disclosed to persons not having need of such disclosure, consistently with the purpose of the loan. The document is to be returned to Armco upon request and in all events upon completion of the use for which it was loaned

ADDED 12-9-82

NOTES:
1. FOR USE WHEN BEACONS ARE WIRED THRU COLL. RING AND ACTUATED BY REMOTE SWITCH.

| | | | |
|---|---|---|---|
| TOLERANCES UNLESS OTHERWISE SPECIFIED | | | |
| SURFACES | | | |
| FINISH | | | |
| FRACTIONS ± | DECIMALS ± | ANGLES ± | |
| SCALE | NONE | | |
| SUPERSEDES | | | |
| ASSEMBLY NUMBER | | | |

ARMCO National Supply Company

INST., BEACON LIGHTS - E.P. RIG CONNECTED - 05-435 120V, 240VAC

| DRAWN | DATE | SIZE | PART NUMBER |
|---|---|---|---|
| | 5-11-81 | A | 1612009-801 |
| CHECKED | DATE | | |
| | 5-12-82 | | |

| REV | DESCRIPTION | KNO'D BY | DATE | C.O. |
|---|---|---|---|---|
| A | WAS 7 COND., "18 AWG | LOL | 7-13-82 | 82-413 |

## WIRING - POWER OUT

| WIRE | FROM | CONNECTOR | TO | CONNECTOR | COLOR | CABLE PART NO. | LENGTH |
|---|---|---|---|---|---|---|---|
| D | COLLECTOR RING WIRES 1 THRU 7 | 7822025 | CAB COMM. | — | AS MARK. | 7802548 ITT 8 COND., #16GA | 30' |
| E | COLLECTOR RING WIRES 8 | 7822026 | L.H. FRONT PANEL J-BOX FOR LIGHTS | 7817094 | BLACK | 7802423 TSGA-4 #14-3 | 30' |
| | 9 | 7822026 | | 7817094 | RED | | |
| | 12 | WIRE 'F' WHITE | | 7817094 | WHITE | | |
| F | COLLECTOR RING WIRES 10 | 7802565 | CAB BRKR. BOX | — | BLACK | 7802470 TSGA-50-3 | 30' |
| | 11 | 7802565 | | — | RED | | |
| | 12 | 7802565 | | — | WHITE | | |

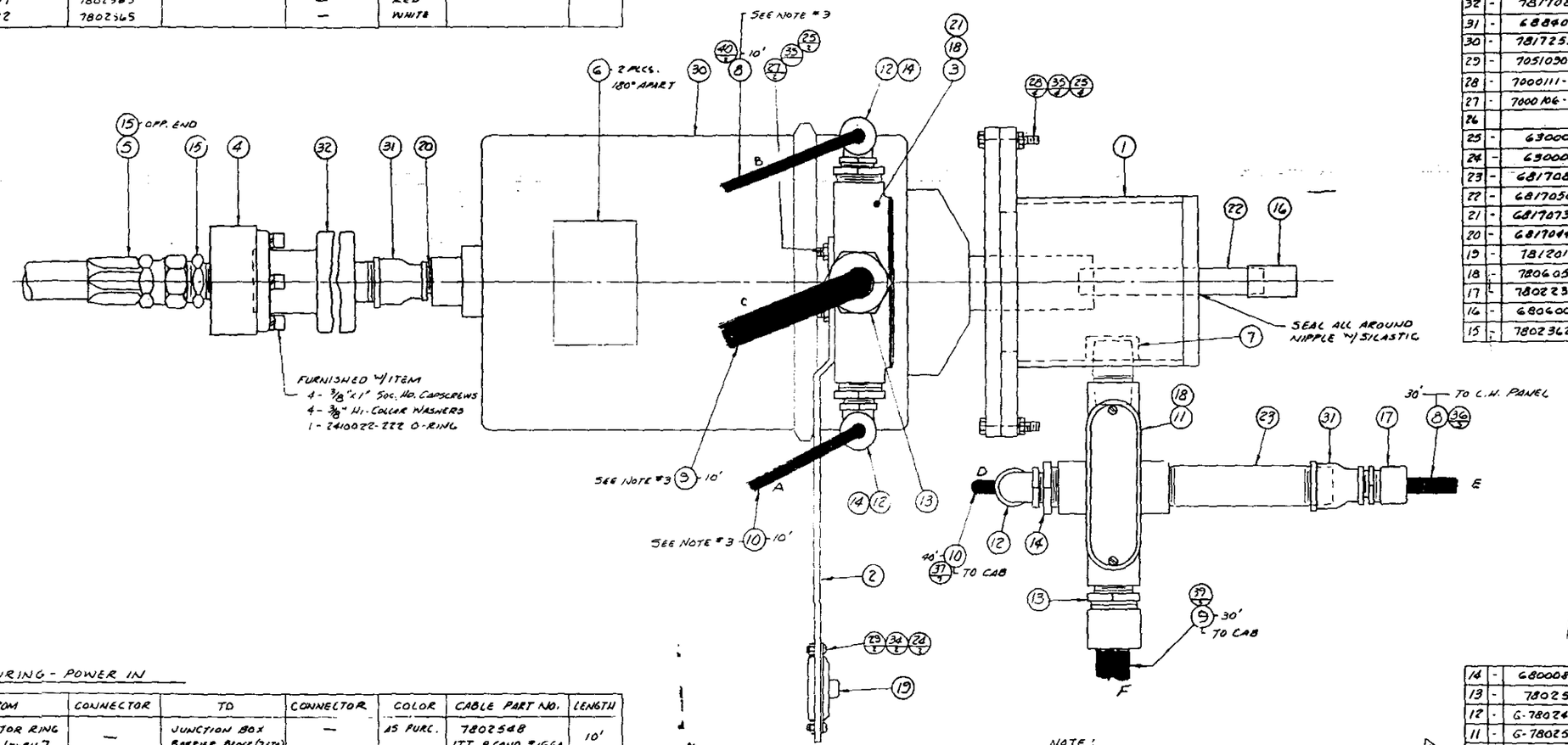


| | | | | |
|---|---|---|---|---|
| 33 | | | | |
| 32 | - | 7817088 | ROTORSEAL, FAWICK RH-1" | 1 |
| 31 | - | 6884024 | REDUCER, STD. PIPE 1"x1/2" | 2 |
| 30 | - | 7817255 | RING, COLLECTOR 12 COND. | 1 |
| 29 | - | 7051030-01 | SCREW, RD. HD. MACH #10-24 x 1/2" C.P. | 2 |
| 28 | - | 7000111-11 | SCREW, H.H. CAP 1/4"x1 3/4" GR.5 C.P. | 4 |
| 27 | - | 7000106-11 | " " " 1/4"x3/4" " " | 2 |
| 26 | | | | |
| 25 | - | 6300041 | NUT, HEX 1/4" C.P. | 6 |
| 24 | - | 6300001 | " " #10-24 C.P. | 2 |
| 23 | - | 6817081-6 | NIPPLE, STD 1"x6" GALV. | 1 |
| 22 | - | 6817056 | " " 1/2"x6" | 1 |
| 21 | - | 6817073-6 | " , CLOSE 1" GALV. | 1 |
| 20 | - | 6817044-6 | " " 1/2" " | 1 |
| 19 | - | 7812018 | MOUNT, LORD 206 ADL-30 | 1 |
| 18 | - | 7806053 | GASKET, ESCO 1943-1" | 2 |
| 17 | - | 7802235 | CONNECTOR, C/N CGB-194 1/2" | 1 |
| 16 | - | 6806004-6 | COUPLING, STD. PIPE 1/2" GALV. | 1 |
| 15 | - | 7802362 | CONNECTOR, "/N CS205x16 | 2 |

## WIRING - POWER IN

| WIRE | FROM | CONNECTOR | TO | CONNECTOR | COLOR | CABLE PART NO. | LENGTH |
|---|---|---|---|---|---|---|---|
| A | COLLECTOR RING RINGS 1 THRU 7 | — | JUNCTION BOX BARRIER BLOCK (7 STA) | — | AS PURC. | 7802548 ITT 8 COND., #16GA | 10' |
| B | COLLECTOR RING RING 8 | — | JUNCTION BOX BARRIER BLOCK 5 STATION | — | BLACK | 7802423 TSGA-4 14-3 | 10' |
| | RING 9 | — | | — | RED | | |
| | | 7818270 | | 7818270 | WHITE | | |
| C | COLLECTOR RING RING 10 | - | JUNCTION BOX BARRIER BLOCK 5 STATION | — | BLACK | 7802470 TSGA-50-3 | 10' |
| | RING 11 | - | | | RED | | |
| | RING 12 | - | | | WHITE | | |

RINGS 1 THRU 7 - COMMUNICATIONS - 5 AMPS
RINGS 8, 9 - BEACONS - 35 AMPS
RINGS 10, 11 - MAIN POWER - 75 AMPS
RING 12 - EARTH - 75 AMPS

A NOTE:
EIGHTH CONDUCTOR ON COMM. CABLE 7802548 NOT USED.

NOTE:
1. MAKE ALL CONNECTIONS TO COLLECTOR RING - POWER IN, POWER OUT. COIL UP CABLE. SHIP AS COMPLETE UNIT.
2. ● NOT SHOWN
3. SEE DWG. B 1612009-810 FOR TERMINATION OF WIRES A, B, C.

| | | | |
|---|---|---|---|
| 14 | - | 6800083-8 | BUSHING, PARKER 1"x1/2" 3 |
| 13 | - | 7802566 | CONNECTOR, C/N CGB-398 1" 2 |
| 12 | - | G-7802431 | CONNECTOR, C/N CGE-154 1/2" 3 |
| 11 | - | G-7802500 | CONDUIT, C/N X-37 1" w/Cover 1 |
| 10 | - | 7802548 | CABLE, ITT 8 COND. #16 GA. 50' 1 |
| 9 | - | 7802470 | " , ANIXTER TSGA-50-3 40' 1 |
| 8 | - | 7802423 | " , " TSGA-4 40' 1 |
| 7 | - | 7801162 | BUSHING, CONDUIT ESCO 124 1" 1 |
| 6 | D | 2407311 | LABEL, WARNING 2 |
| 5 | C | 2400066-15 | NOSE 1" M.P. 25 1/8" OAL 1 |
| 4 | D | X16-1939 | FLANGE 1 |
| 3 | D | 1612009-803 | BOX, DRILLED CONDULET 1 |
| 2 | C | 1607637 | BAR, TIE 1 |
| 1 | B | G-1613657 | ADAPTER 1 |

SEE NOTE 4

| | | | |
|---|---|---|---|
| 40 | - | 7818270 | SPLICE, CLOSED END 2 |
| 39 | - | 7802568 | CONNECTOR, HI-LINE #2F323 3 |
| ● 38 | - | 7819098 | TERMINAL, AMP 31302 #16-14 #8 Screw 3 |
| 37 | - | 7822025 | WINDOW SPLICE 4MP 320562 7 |
| 36 | - | 7822026 | " " " 320570 3 |
| 35 | - | 7613033 | WASHER, 1/8" Reg. Spg. Lock C.P. 6 |
| 34 | - | 7613025 | " , #10 " " " " 2 |

REF. 1612009-810

APPROVED BY: GDH 6-22-82

MATERIAL | SPECIFICATIONS: VENDOR, NUMBER

ITEM | NO. REQ'D | PART NUMBER OR SIZE | DESCRIPTION | MAT'L

ALLOWANCE MACHINE TOLERANCES UNLESS OTHERWISE SPECIFIED: SURFACE, FINISH, FRACTIONS ± DEC., ANGLES ± DEG., SCALE 6"=1'-0", SUPERSEDES, ASSEMBLY NUMBER X16-5197, 5198

ARMCO National Supply Company
Division of Armco Steel Corporation
Gainesville, Texas 76240

COLLECTOR RING CPT. 12 COND. 03-215, 03-435

DRAWN 6-2-82 BY JC | SIZE A | PART NUMBER 1612009-805
CHECKED 6-22-82 BY LOL

1612009-805
4

09

FAVOR CONSULTAR NO SISTEMA, POIS PODERÁ EXISTIR REVISÕES MAIS ATUALIZADAS.

| REV. | DESCRIPTION | CHK'D BY | DATE | C.N. |
|---|---|---|---|---|

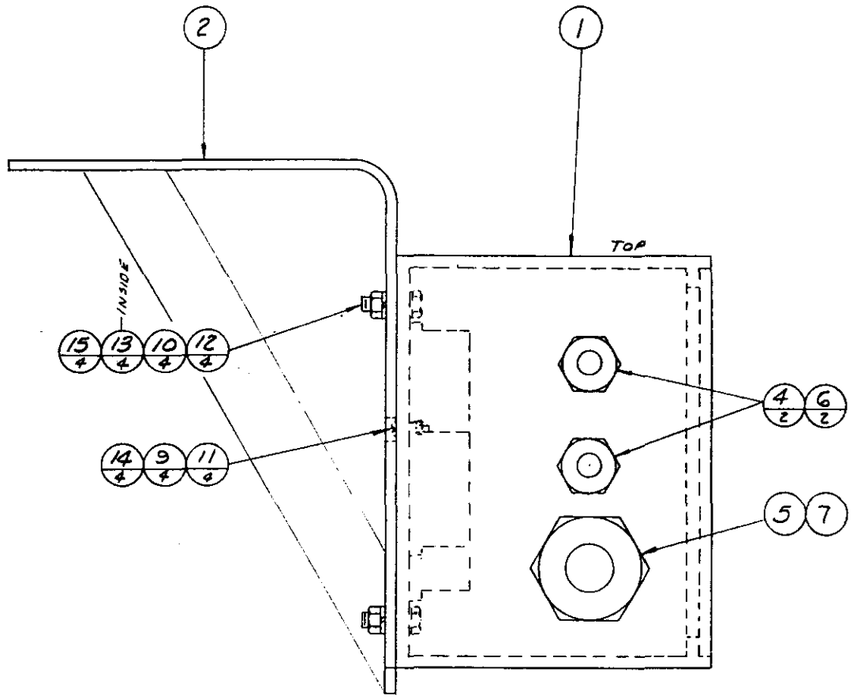


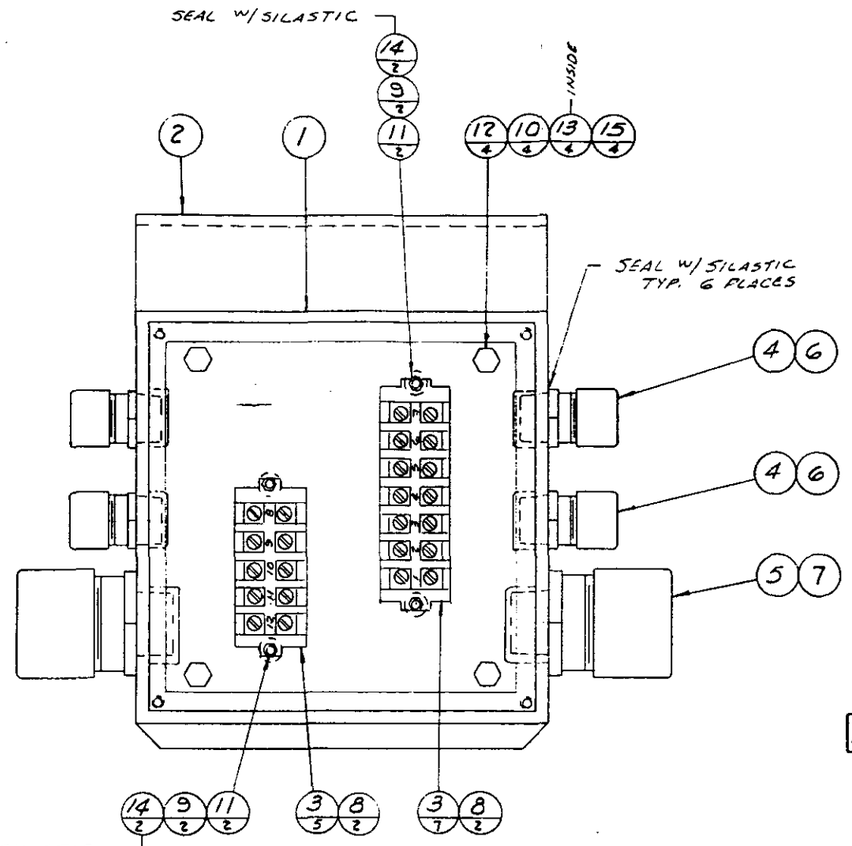


1612009-806
REV.

(10)

| | | | | |
|---|---|---|---|---|
| 12 | - | 7000157-11 | SCREW, H.H. CAP 5/16"x1" GR.5 C.P. | 4 |
| 11 | - | 7051079-01 | SCREW, RD. HD. MACH #8-32 x 3/4" C.P. | 4 |
| 10 | - | 6300051 | NUT, HEX 5/16" C.P. | 4 |
| 9 | - | 6330080 | NUT, HEX #8-32 MACH. C.P. | 4 |
| 8 | - | 7804027 | END, BARRIER BLOCK BUCHANAN 230 | 4 |
| 7 | - | 7801162 | BUSHING, CONDUIT ESCO 124 1" | 2 |
| 6 | - | 7801160 | " , " " 123 3/4" | 4 |
| 5 | - | 7802566 | CONNECTOR, C/H CGB-398 1" | 2 |
| 4 | - | 7802279 | " , " CGB-235 3/4" | 4 |
| 3 | - | 7801211 | BLOCK, BARRIER BUCHANAN #213 | 12 |
| 2 | B | 1612009-808 | PLATE, MTG. - J-BOX | 1 |
| 1 | B | 1612009-807 | BOX, JUNCTION | 1 |
| 15 | - | 7619037 | WASHER, REG. SPG. LOCK 5/16" C.P. | 4 |
| 14 | - | 7619021 | " , " " " #8 C.P. | 4 |
| 13 | - | G-7608062 | " , BARSEAL 75330-GEP 5/16" | 4 |

| ITEM | DWG SIZE | PART NUMBER | DESCRIPTION | REQ'D |
|---|---|---|---|---|

ALLOWABLE MACHINE TOLERANCES UNLESS OTHERWISE SPECIFIED
FRACTIONS ± .016"
ANGLES ± 0° 30'

MATERIAL | VENDOR | HARDNESS

ARMCO National Supply Company Division of Armco Gainesville TX

BOX CPT., JUNCTION - MAIN POWER COLLECTOR RING

| | | | | | |
|---|---|---|---|---|---|
| SCALE 6" = 1'-0" | SUPERSEDES | DRAWN 6-1-82 | BY JC | B | PART NUMBER 1612009-806 |
| SURFACE FINISH RMS | ASSEMBLY NUMBER X16-5147, 5148 | SUPERSEDED BY | CHECKED 6-22-82 | BY LOL | |

APPROVED BY: GDH, 6-22-82

FAVOR CONSULTAR NO SISTEMA, POIS PODERA EXISTIR REVISÕES MAIS ATUALIZADAS.

| REV. | DESCRIPTION | CHK'D BY | DATE | C. N. |
|---|---|---|---|---|
| A | WAS 7 COND., #18AWG | LDL | 7-13-82 | 82-413 |

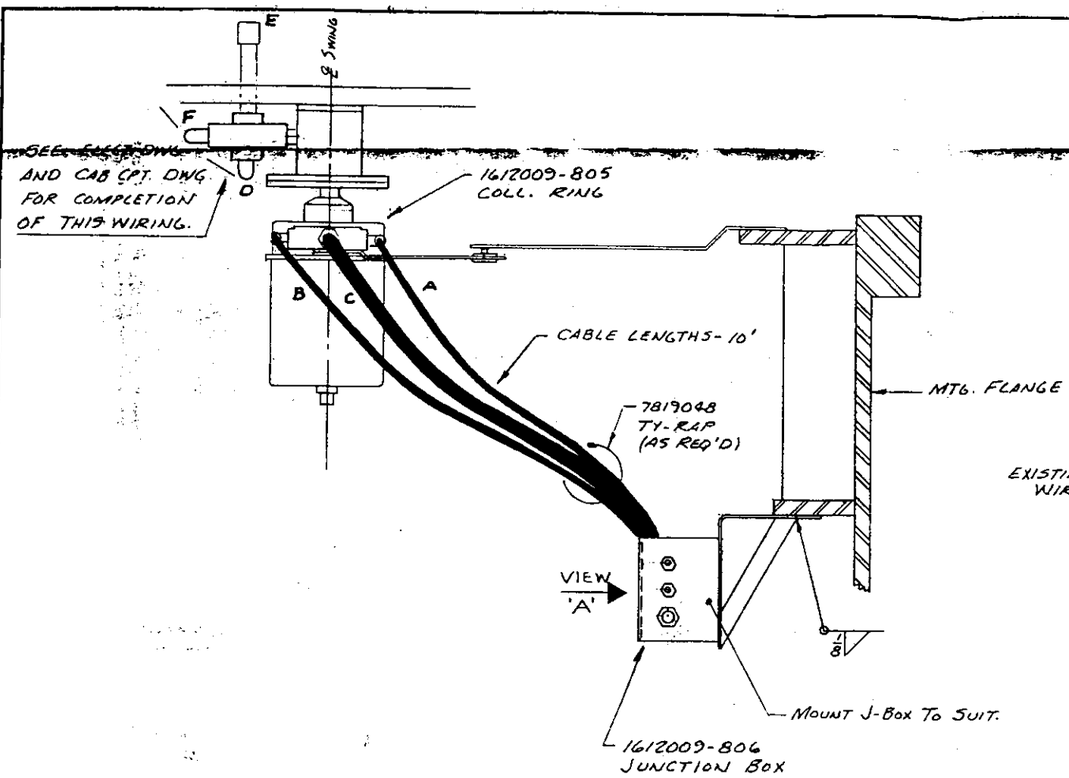


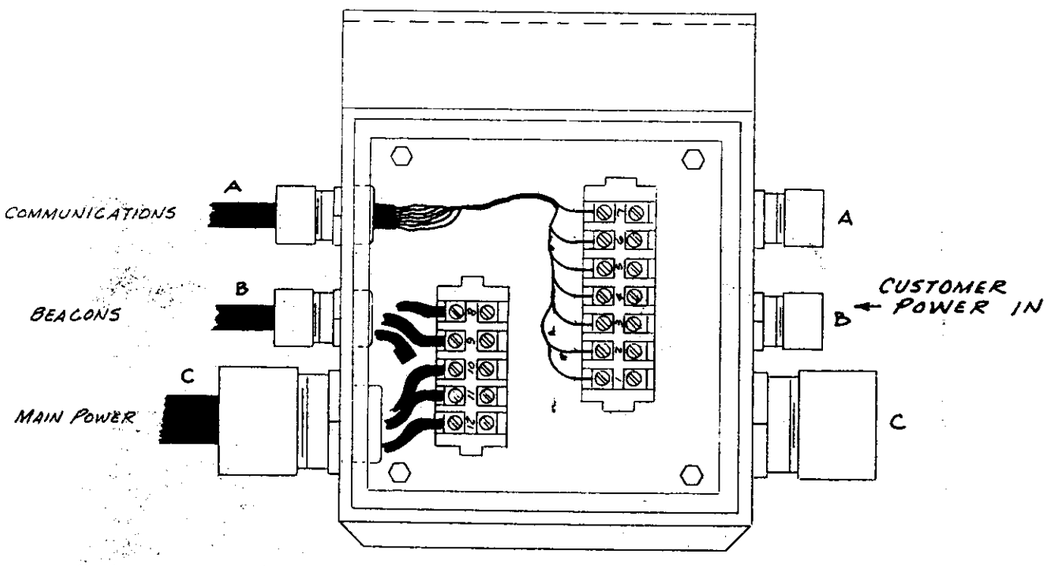


VIEW 'A'
(J-BOX W/O COVER)

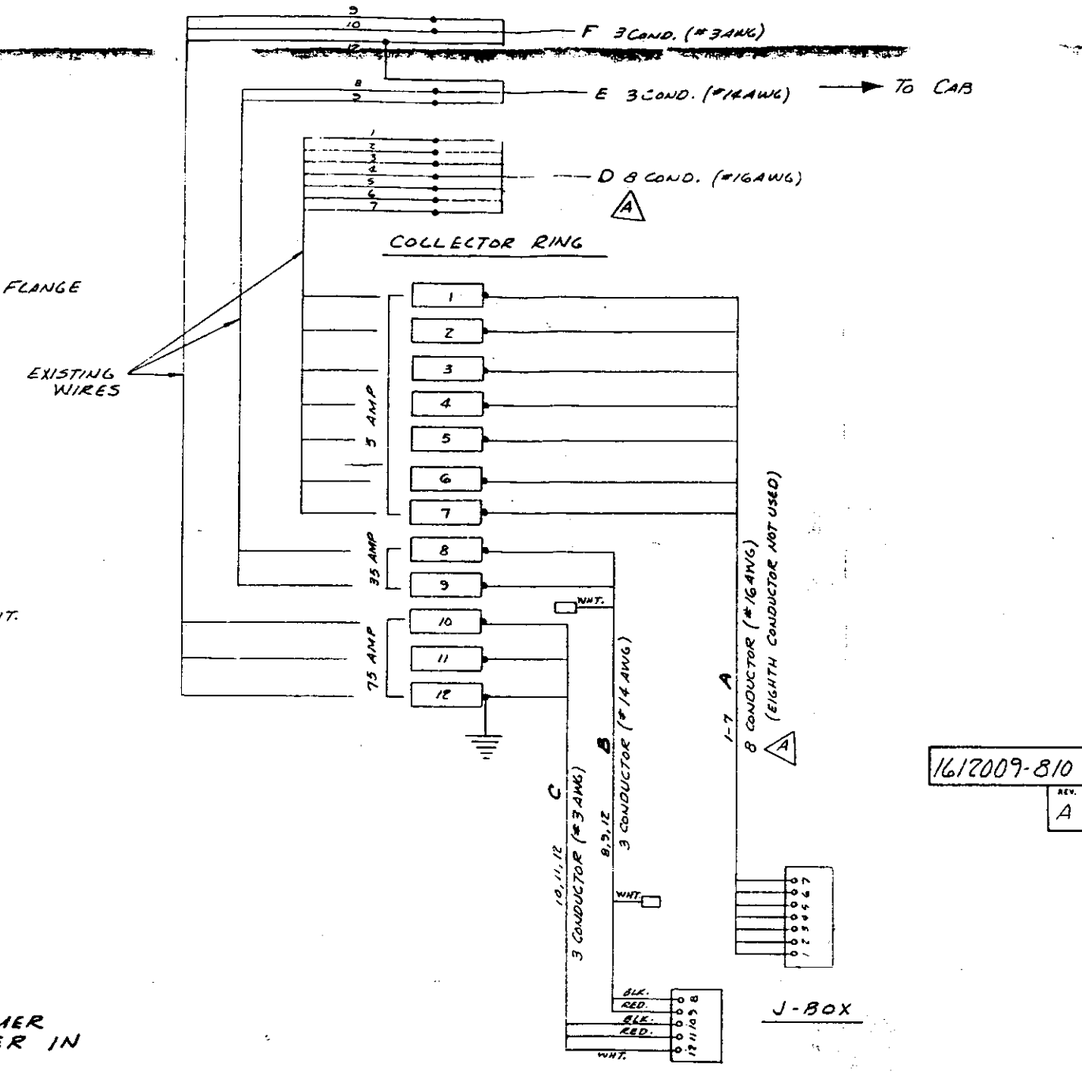


16I2009-810
REV. A

ADDED - 12-9-82

FAVOR CONSULTAR NO SISTEMA, POIS PODERÁ EXISTIR REVISÕES MAIS ATUALIZADAS.


**PROPRIETARY INFORMATION**

This document contains National Supply Co., Division of Armco Inc. proprietary and confidential information. It is loaned for limited purposes only and remains the property of Armco. It may not be reproduced in whole or in part without the written consent of Armco, and must not be disclosed to persons not having need of such disclosure consistently with the purpose of the loan. The document is to be returned to Armco upon request and in all events upon completion of the use for which it was loaned.


APPROVED BY: GDH, 6-22-82

REF. 16I2009-805

| ITEM | DWG SIZE | PART NUMBER | DESCRIPTION | REQ'D |
|---|---|---|---|---|
| ALLOWABLE MACHINE TOLERANCES UNLESS OTHERWISE SPECIFIED: FRACTIONS ± .015" ANGLES ± 0° 30' | | MATERIAL | VENDOR | HARDNESS |

ARMCO National Supply Company, Division of Armco, Geismgile, TX

INSTALLATION & WIRING - J-BOX
05-435 & 05-215 COLLECTOR RING

| SCALE | SUPERSEDES | DRAWN | BY | PART NUMBER |
|---|---|---|---|---|
| ~ | | 6-3-82 | JC | B 16I2009-810 |
| SURFACE FINISH RMS | ASSEMBLY NUMBER REF ONLY | SUPERSEDED BY | CHECKED 6-22-82 | BY LDL |

| | | | | |
|---|---|---|---|---|
| A | WAS 11-REQ'D | [illegible] | [illegible] | 78-[illegible] |
| B | WAS G-7815043 | JEC3 | 4-7-81 | 81-158 |

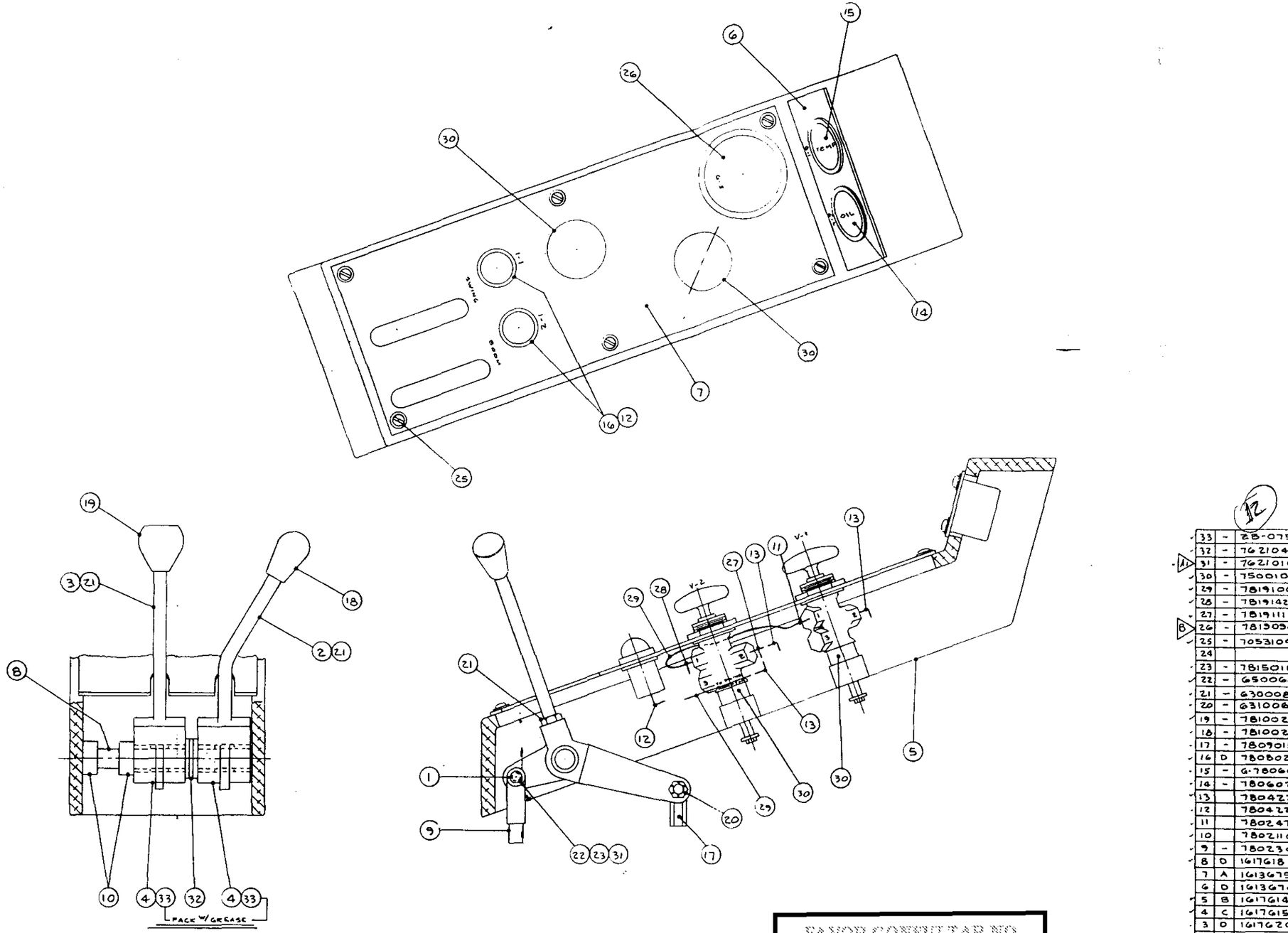


FAVOR CONSULTAR NO SISTEMA, POIS PODERÁ EXISTIR REVISÕES MAIS ATUALIZADAS.

12

| | | | | |
|---|---|---|---|---|
| 33 | - | 28-0756 | BEARING, TORR # B-1210 | 4 |
| 32 | - | 7621044 | WASHER, TYPE A NAR. 3/4 x 1.469" C.P. | 3 |
| 31 | - | 7621016 | " , " " 1/4 x .625" C.P. | 1 |
| 30 | - | 7500104 | VALVE, BELLOWS # MO5B-224-59 | 2 |
| 29 | - | 7819106-0 | TUBING, 1/4" x 18" | 1 |
| 28 | - | 7819142 | TEE, P/H # 271NTA-4-4 | 1 |
| 27 | - | 7819111 | " , W/H # 3750 x 4 | 1 |
| 26 | - | 7819090 | TACHOMETER, S/W # 551-SF | 1 |
| 25 | - | 7053104-13 | SCREW, PAN HD. MACH. 1/4"-20 x 1/2" NIC. PL | 10 |
| 24 | | | | |
| 23 | - | 7815018 | PIN, CABLECRAFT # CP-111, 1/4" x 7/8" | 1 |
| 22 | - | 6500608 | " , COTTER 3/32" x 1" | 1 |
| 21 | - | 6300081 | NUT, HEX. 1/2" CAD. PLTD. | 2 |
| 20 | - | 6310081 | " , FLEXLOC # 21FA-624 (3/8"-24) | 2 |
| 19 | - | 7810024 | KNOB, DAVIES # 85 3/8"-24 | 1 |
| 18 | - | 7810023 | " , " # 70 3/8"-16 | 1 |
| 17 | - | 7809015 | JOINT, BALL. SUPERIOR # SP6-1004CP | 2 |
| 16 | D | 7808024 | INDICATOR, NORGREN # SVS-403-000 1/8" | 2 |
| 15 | - | G-7806069 | GAGE, TEMP. S/W # 361-CB-288 | 1 |
| 14 | - | 7806021 | " , OIL PRESS. S/W # 360-JC | 1 |
| 13 | | 7804223 | ELBOW, W/H # 1469-4-4K | 3 |
| 12 | | 7804220 | " , " # 1469-4 | 2 |
| 11 | | 7802478 | CONNECTOR, W/H # 1468-4-4K | 1 |
| 10 | | 7802110 | COLLAR, DODGE 3/4" | 2 |
| 9 | - | 7802340 | CLEVIS | 1 |
| 8 | D | 1617618 | SHAFT | 1 |
| 7 | A | 1613675 | PANEL | 1 |
| 6 | D | 1613674 | " | 1 |
| 5 | B | 1617614 | " | 1 |
| 4 | C | 1617615 | LEVER | 2 |
| 3 | D | 1617626 | HANDLE, SWING | 1 |
| 2 | D | 1617624 | " , BOOM HOIST | 1 |
| 1 | D | 1612648 | BUSHING | 1 |

MATERIAL

ITEM | SIZE | PART NUMBER OR SIZE | DESCRIPTION | REQ'D

ALLOWABLE MACHINE TOLERANCES UNLESS OTHERWISE SPECIFIED

SURFACE FINISH RMS

FRACTIONS ± .015"

ANGLES ± 0°30'

SCALE FULL

SUPERSEDES

ASSEMBLY NUMBER

ARMCO National Supply Company
Division of Armco Steel Corporation
Gainesville, Texas 76240

ASSEMBLY, L.H. CONSOLE PANEL, OS-435 AC

DRAWN 3-9-78 | BY LYONS | SIZE A | PART NUMBER G-1613683

CHECKED | BY

SPECIFICATIONS

VENDOR | HARDNESS

G-1613683 REV B

1-REQ'D

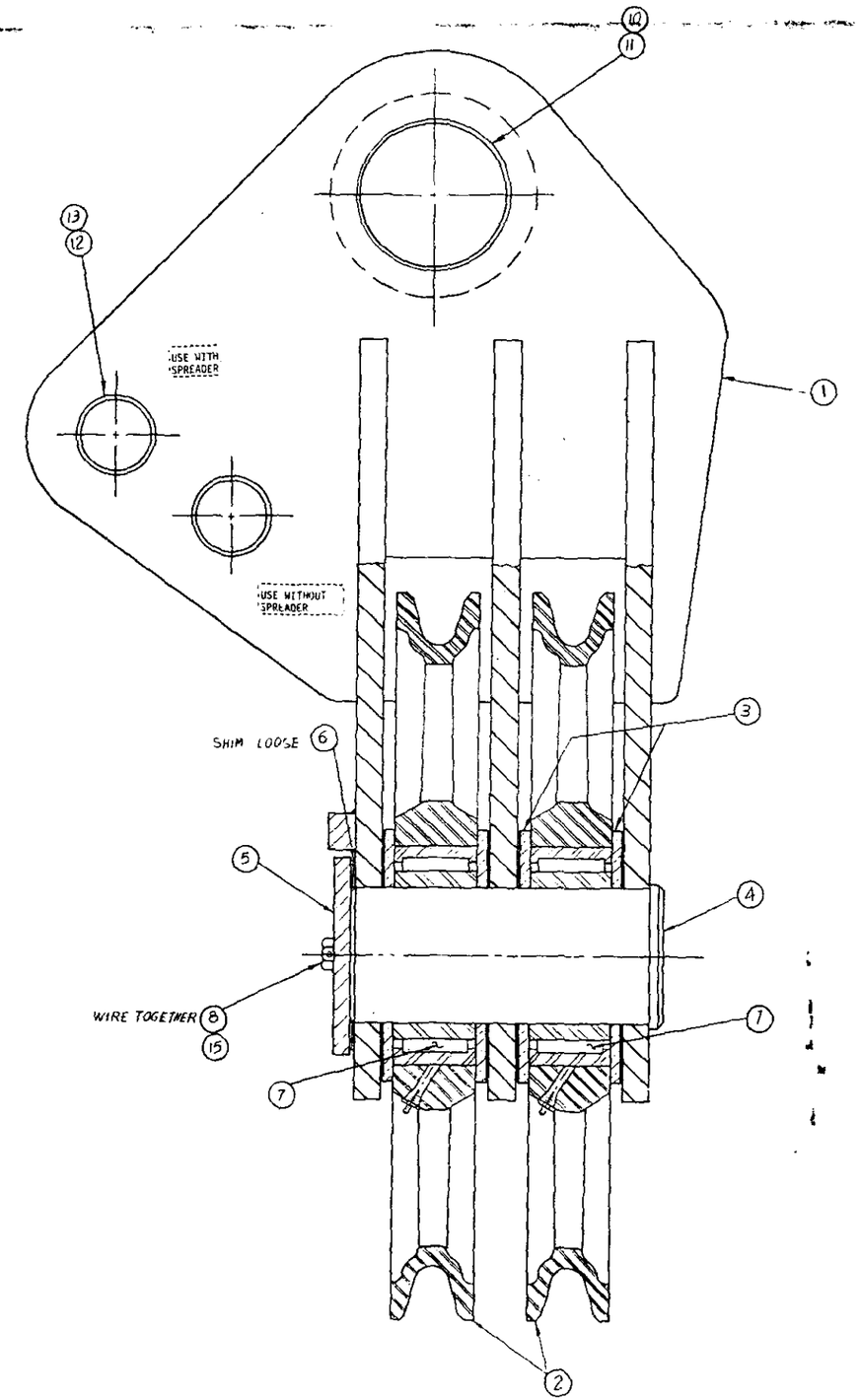


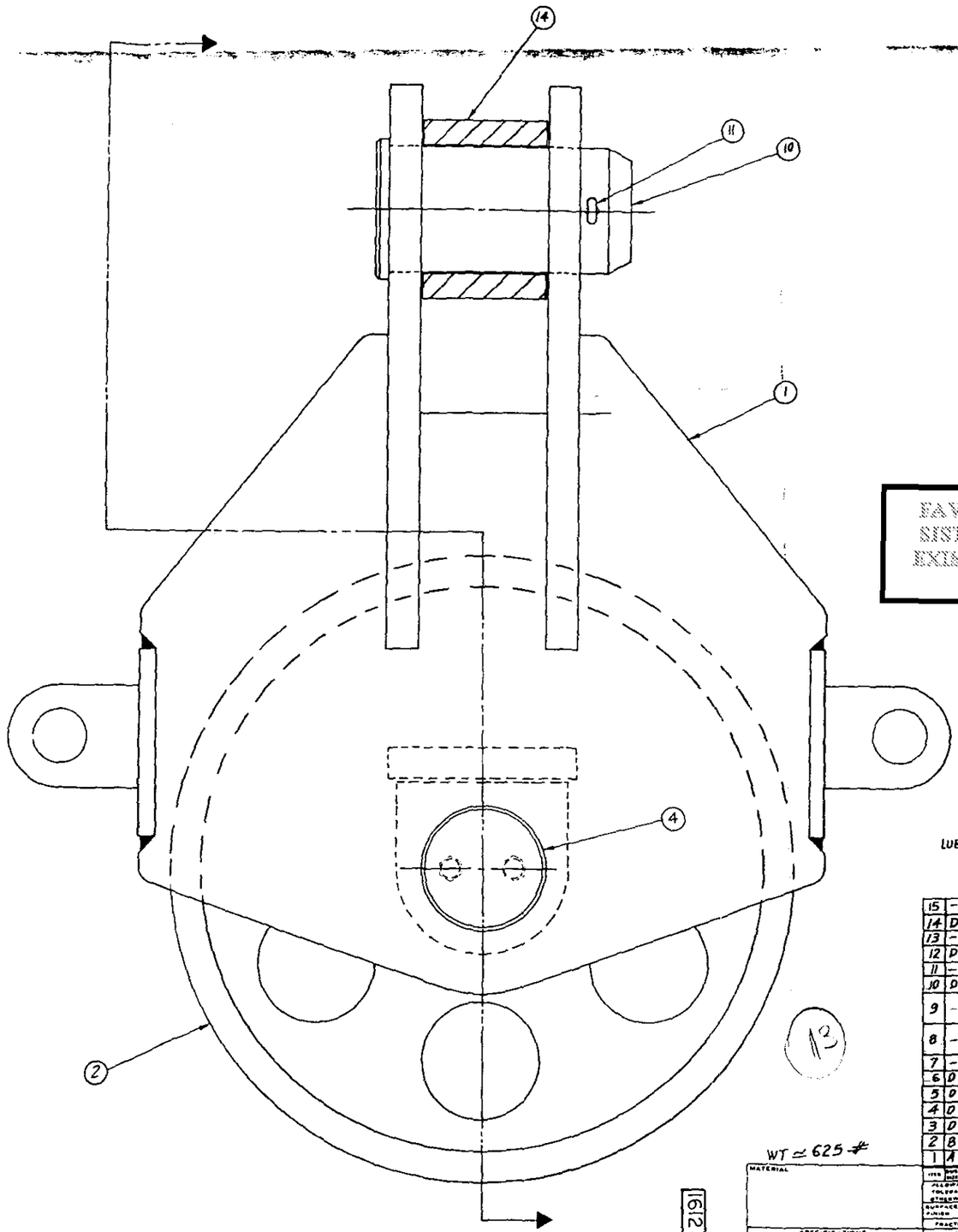

FAVOR CONSULTAR NO SISTEMA, POIS PODERÁ EXISTIR REVISÕES MAIS ATUALIZADAS.

THIS DOCUMENT IS SUBJECT TO REVIEW BY CERTIFYING AUTHORITIES

LUBRICATE SHEAVES AT ASSEMBLY

| | | | | |
|---|---|---|---|---|
| 15 | – | 7822095 | WIRE .064" DIA ANN.SS | 1 |
| 14 | D | 1612437 | BUSHING | 1 |
| 13 | – | 650624 | PIN, COTTER ⅛ x 3" | 1 |
| 12 | D | 1612435 | PIN | 1 |
| 11 | – | 650244-0-S | PIN, COTTER ⅜ x 5" | 1 |
| 10 | D | 1612438 | PIN | 1 |
| 9 | – | 7805052 | FITTING, GREASE ⅛" NPT ALEMITE 1608 | 2 |
| 8 | – | 24-00060 | SCREW, DRLD, HD. CAP ¾"-1 ¾" | 2 |
| 7 | – | ZB-3791 | BEARING, ROLLER TOR | 2 |
| 6 | D | 1612409 | WASHER, SHIM | 3 |
| 5 | D | 1612425 | CAP | 1 |
| 4 | D | 1612424 | SHAFT | 1 |
| 3 | D | 1615714 | WASHER, THRUST | 4 |
| 2 | B | 1615716 | SHEAVE | 2 |
| 1 | A | 1612453 | BLOCK ONLY | 1 |

WT ≃ 625 #

MATERIAL

SPECIFICATIONS

VENDOR HARDNESS

Armco National Supply Company

BLOCK CPT., TWO SHEAVE
OS-435

SCALE 6"=1'-0"

DRAWN 3-29-82 BY VB SIZE A PART NUMBER 1612455

CHECKED 4-12-82

1612455

| REV | DESCRIPTION | CHK'D BY | DATE | C.N. | REV |
|---|---|---|---|---|---|
| A | 1. ADDED<br>2. ADDED SECTION A-A<br>3. WAS 12 REQ'D<br>4. WAS 13 REQ'D<br>5. WAS 28 REQ'D<br>6. WAS 2 REQ'D<br>7. WAS 4 REQ'D<br>8. WAS 6 REQ'D | LDL | 1-21-82 | 81-696 | |

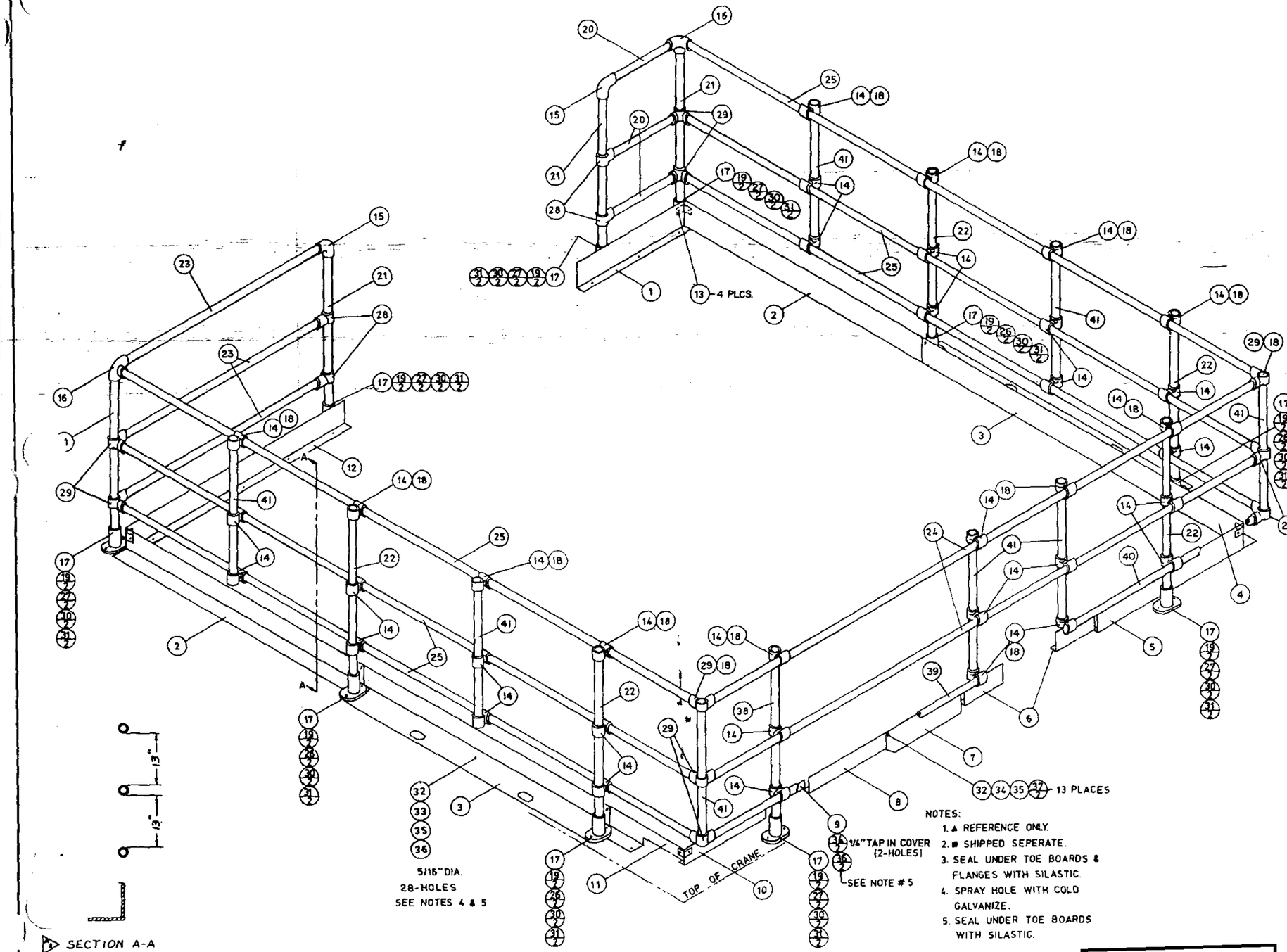


NOTES:
1. ▲ REFERENCE ONLY.
2. ■ SHIPPED SEPERATE.
3. SEAL UNDER TOE BOARDS & FLANGES WITH SILASTIC.
4. SPRAY HOLE WITH COLD GALVANIZE.
5. SEAL UNDER TOE BOARDS WITH SILASTIC.

| | | | | | |
|---|---|---|---|---|---|
| A1 ■ | 41 | - | 6701237 | PIPE, STD. GALV. P.E. SCH. 40, 1-1/2" X 32" | 8 |
| A2 ■ | 40 | - | 6701237 | PIPE, STD. GALV. P.E. SCH. 40, 1-1/2" X 50" | 1 |
| A1 ■ | 39 | - | 6701237 | PIPE, STD. GALV. P.E. SCH. 40, 1-1/2" X 6'-11" | 1 |
| ■ | 38 | - | 6701237 | PIPE, STD. GALV. P.E. SCH. 40, 1-1/2" x 40-1/2" | 1 |
| ▲ | 37 | - | 7621016 | WASHER; TYPE A NARROW, 1/4" CAD. PLTD. | 26 |
| A3 ▲ | 36 | - | G-7608061 | WASHER, BARSEAL, 1/4" | 30 |
| A4 ▲ | 35 | - | 7619033 | WASHER, REG. SPG. LOCK, 1/4" CAD. PLTD. | 41 |
| ▲ | 34 | - | 7000106-11 | SCREW, H.H. CAP, 1/4" x 3/4" CAD. PLTD. | 15 |
| ▲ | 33 | - | 7000108-11 | SCREW, H.H. CAP, 1/4" x 1" CAD. PLTD. | 28 |
| ▲ | 32 | - | 6300041 | NUT, HEX, 1/4" CAD. PLTD. | 41 |
| ▲ | 31 | - | G-7608067 | WASHER, BARSEAL, 1/2" | 20 |
| ▲ | 30 | - | 7619050 | WASHER, REG. SPG. LOK., 1/2" CAD. PLTD. | 20 |
| A5 ■ | 29 | - | 7819073 | TEE, KEE KLAMP # 21-8 | 10 |
| A5 ■ | 28 | - | 7819072 | TEE, KEE KLAMP # 10-8 | 4 |
| ▲ | 27 | - | 7000306-11 | SCREW, H.H. CAP, 1/2" x 1-3/4" CAD. PLTD. | 12 |
| ▲ | 26 | - | 7000304-11 | SCREW, H.H. CAP, 1/2" x 1-1/4" CAD. PLTD. | 8 |
| A5 ■ | 25 | - | 6701237 | PIPE, STD. GALV. P.E. SCH. 40, 1-1/2" x 13'-1" | 6 |
| ■ | 24 | - | 6701237 | PIPE, STD. GALV. P.E. SCH. 40, 1-1/2" x 12'-6" | 2 |
| A6 ■ | 23 | - | 6701237 | PIPE, STD. GALV. P.E. SCH. 40, 1-1/2" x 53-1/2" | 3 |
| ■ | 22 | - | 6701237 | PIPE, STD. GALV. P.E. SCH. 40, 1-1/2" x 43" | 5 |
| ■ | 21 | - | 6701237 | PIPE, STD. GALV. P.E. SCH. 40, 1-1/2" x 41" | 4 |
| A4 ■ | 20 | - | 6701237 | PIPE, STD. GALV. P.E. SCH. 40, 1-1/2" x 20" | 3 |
| ▲ | 19 | - | 6300081 | NUT, HEX. 1/2" CAD. PLTD. | 20 |
| A5 ■ | 18 | - | 7810021 | KNOB, KEE KLAMP # 77-8 | 16 |
| ▲ | 17 | - | 7805107 | FLANGE, KEE KLAMP # 62-8 | 10 |
| ■ | 16 | - | 7804073 | ELBOW, KEE KLAMP # 20-8 | 2 |

1613885 REV A

| | | | | | |
|---|---|---|---|---|---|
| A6 ■ | 15 | - | 7804072 | ELBOW, KEE KLAMP # 15-8 | 2 |
| A1 ■ | 14 | - | 7802274 | CROSSOVER, KEE KLAMP #45-8 | 36 |
| ▲ | 13 | D | 1607004-758 | CORNER, TOE BOARD | 4 |
| ▲ | 12 | C | 1613884-12 | BOARD, TOE | 1 |
| ▲ | 11 | C | 1613884-11 | BOARD, TOE | 1 |
| ▲ | 10 | C | 1613884-10 | BOARD, TOE | 1 |
| ▲ | 9 | D | 1613884-9 | BOARD, TOE | 1 |
| ▲ | 8 | C | 1613884-8 | BOARD, TOE | 1 |
| ▲ | 7 | C | 1613884-7 | BOARD, TOE | 1 |
| ▲ | 6 | C | 1613884-6 | BOARD, TOE | 2 |
| ▲ | 5 | C | 1613884-5 | BOARD, TOE | 1 |
| ▲ | 4 | D | 1613884-4 | BOARD, TOE | 1 |
| ▲ | 3 | C | 1613884-3 | BOARD, TOE | 2 |
| ▲ | 2 | C | 1613884-2 | BOARD, TOE | 2 |
| ▲ | 1 | C | 1613884-1 | BOARD, TOE | 1 |
| | | | PART NUMBER | DESCRIPTION | REQ'D |

ALLOWABLE MACHINE TOLERANCES UNLESS OTHERWISE SPECIFIED
SURFACE RMS
EDGES
FRACTIONS ± DEC.
ANGLES ± MIN.
SCALE NONE
SUPERSEDES

ARMCO National Supply Company
Division of Armco Steel Corporation
Somerville, Texas 77879

SPECIFICATIONS
VENDOR HARDNESS

RAIL, UPPER HAND:-
OS-435

DRAWN 10-22-81 BY SIZE PART NUMBER

FAVOR CONSULTAR NO SISTEMA, POIS PODERÁ EXISTIR REVISÕES MAIS ATUALIZADAS

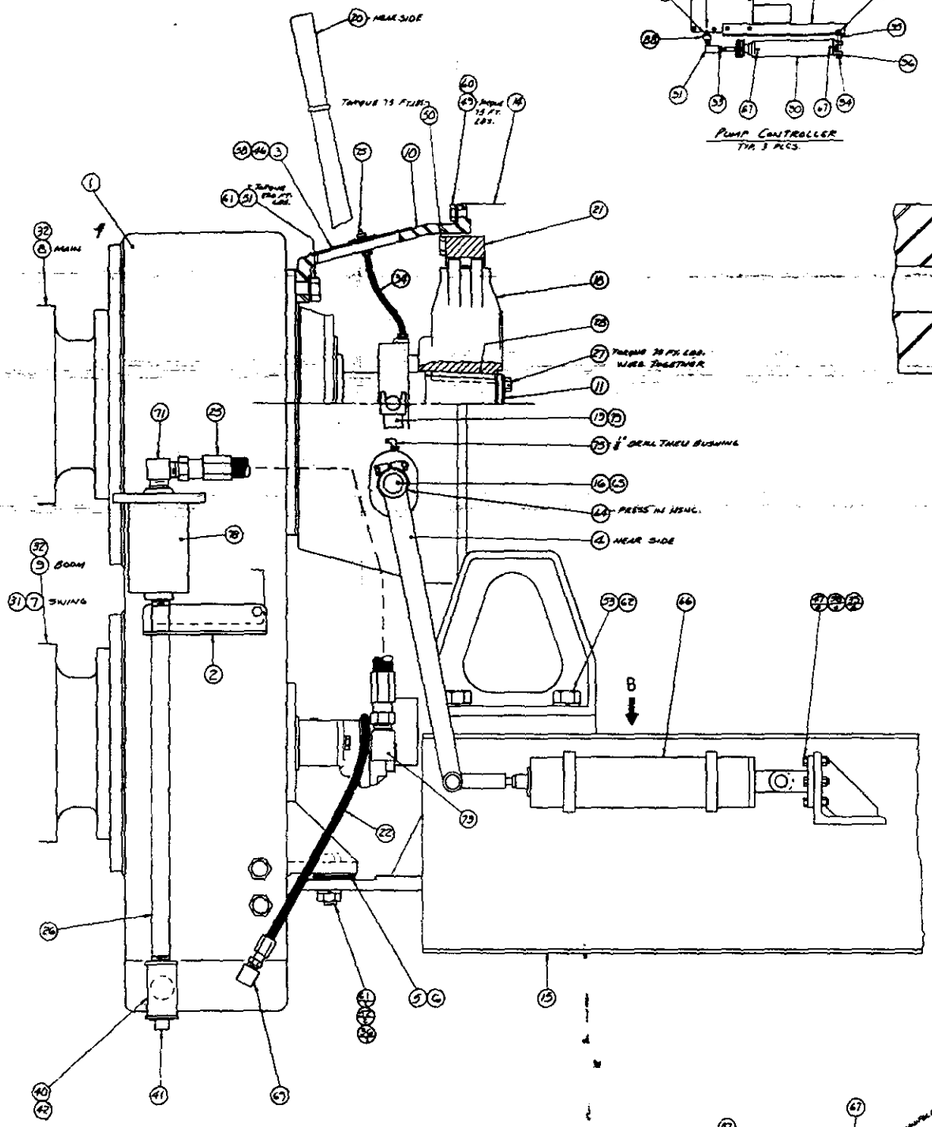





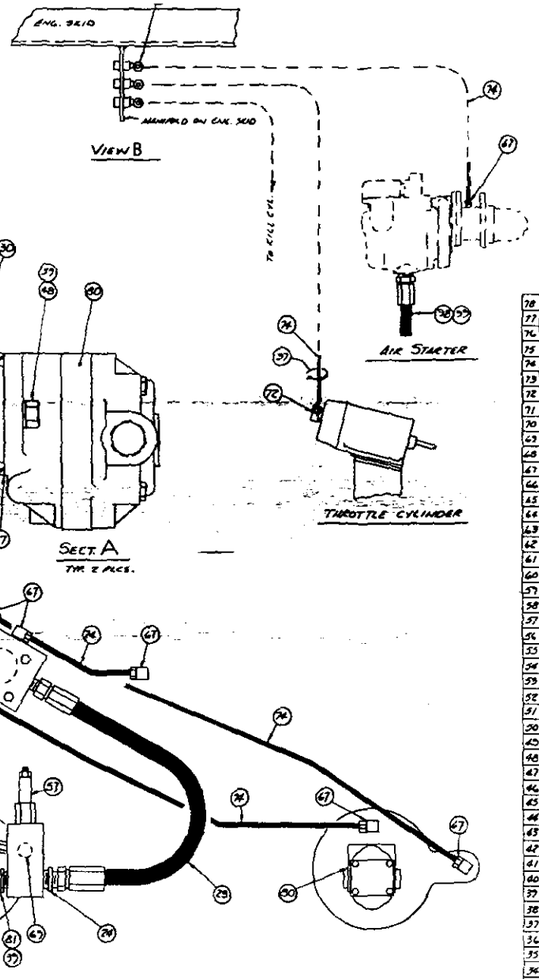


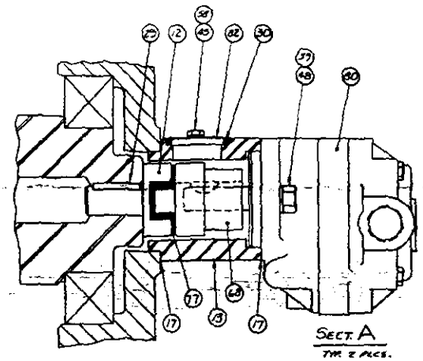





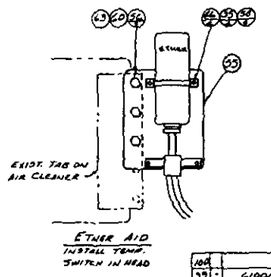


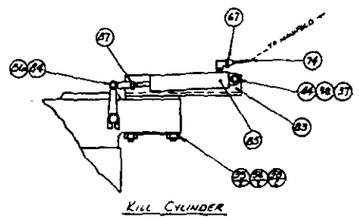


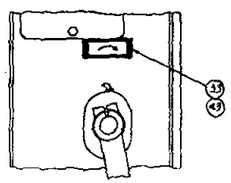

FAVOR CONSULTAR NO SISTEMA, POIS PODERÁ EXISTIR REVISÕES MAIS ATUALIZADAS.

| | | | | |
|---|---|---|---|---|
| 78 | - | 7803008 | FILTER, MARVEL 2023-3/4 B13-100 | 1 |
| 77 | - | 7808012 | INSERT, BOSTON KFGA 13 | 2 |
| 76 | - | 7804063 | GAGE | 1 |
| 75 | - | 7808061 | FITTING, GREASE 1/8"-28° | 3 |
| 74 | - | 7813060 | TUBING, 3/8" O.D. STAINLESS | 24' |
| 73 | - | 7806815 | ELBOW, AERO. 2022-10-10-S | 1 |
| 72 | - | 7806229 | " " 3/4" MBD x 6 x 6R | 6 |
| 71 | - | 7806053 | " " AERO. 2026-12-12-S | 1 |
| 70 | - | 7804117 | ELBOW, 3/4" C3008x6LA | 1 |
| 69 | - | 7806033 | ELBOW, AERO. 2022-8-8-S | 2 |
| 68 | - | 7802391 | COUPLING, BOSTON FC-15 3/4" | 2 |
| 67 | - | 7806220 | ELBOW, 3/4" M45x6R | 14 |
| 66 | - | 7802134 | CYLINDER, MARCO 4BA 2 1/4" DIA. x 12" STROKE | 1 |
| 65 | - | 7802111 | COLLAR, BODEE 7" | 2 |
| 64 | - | 7801163 | BUSHING, BEMIZE 1 7/8"x1"x 3" | 2 |
| 63 | - | 6300020 | NUT, 3/4" HEX C.P. | 3 |
| 62 | - | 7617074 | WASHER, 3/8" REG. SPR. LOCK C.P. | 8 |
| 61 | - | 7617066 | " , 5/16" " " " | 10 |
| 60 | - | 7617050 | " , 1/4" " " " | 18 |
| 59 | - | 7617041 | " , 3/8" " " " | 4 |
| 58 | - | 7617053 | " , 1/2" " " " | 21 |
| 57 | - | 7500126 | VALVE, E.C. 1612-PA-23 | 1 |
| 56 | - | 7000308-N | SCREW, H.H. CAP 1/2"-13" GR 5 C.P. | 3 |
| 55 | D | 1607008-701 | BRACKET | 1 |
| 54 | - | 7000115-11 | SCREW, H.H. CAP 1/4"x 2 3/4" GR 5 C.P. | 2 |
| 53 | - | 7000681-11 | " " " 3/8" x 2" " " | 8 |
| 52 | - | 7000682-11 | " " " 3/8" x 2 1/2" " " | 2 |
| 51 | - | 7000680-11 | " " " 3/8" x 2" " " | 6 |
| 50 | - | 7000311-11 | " " " 1/2" x 2 3/4" " " | 8 |
| 49 | - | 7000305-11 | " " " 1/2" x 1 1/2" " " | 16 |
| 48 | - | 7000216-11 | " " " 5/16" x 3" " " | 4 |
| 47 | - | 7000103-11 | " " " 1/4" x 1 1/4" " " | 4 |
| 46 | - | 7000106-11 | " " " 1/4" x 3/4" " " | 4 |
| 45 | - | 7000102-11 | " " " 1/4" x 3/8" " " | 4 |
| 44 | - | 7003108-16 | " " HEX. SOC. HD. SHLD. 1/4" x 1" | 1 |
| 43 | - | 7178025 | SCREW, RD. HD. DRIVE TYPE U #6 x 3/4" | 2 |
| 42 | - | 6883046 | PEE, STD. M.I. RED. 3/4" x 3/4" x 1" | 1 |
| 41 | - | 6873006 | PLUG, STD. SQ. HD. CORED 3/4" | 1 |
| 40 | - | 6817074 | NIPPLE, STD. 1" x 2" | 1 |
| 39 | - | 6817064-6 | NIPPLE, STD. 1/2" x CLOSE GALV. | 1 |
| 38 | - | 7600640 | TUBING, 3/8" O.D. x .035" WALL x 12' Lg. | 1 |
| 37 | - | 6300001 | NUT, #10-24 HEX C.P. | 1 |
| 36 | - | 6300121 | NUT, 3/8" HEX C.P. | 2 |
| 35 | - | 6300001 | NUT, 1/4" HEX C.P. | 13 |
| 34 | - | 6104003 | HOSE ASSY. | 1 |
| 33 | D | 2407208 | PLATE | 1 |
| 32 | C | 2410022-363 | PACKING, O-RING | 2 |
| 31 | C | 2410022-353 | " " " | 1 |
| 30 | C | 2410022-213 | " " " | 2 |
| 29 | D | 7404032 | KEY, 1/8" x 3/4" x 3/8" | 2 |
| 28 | D | 2403030 | " , 1/2" SQ. x 3 3/8" | 1 |
| 27 | D | 2401180 | SCREW, DRLD. HD. CAP 1/2"-13 x 1 3/4" | 3 |
| 26 | - | 6700601 | PIPE, 3/4" SCH. 80 NSD Y-632 x 17 1/2" TBE | 1 |
| 25 | C | 7600063-6 | HOSE ASSY, 3/4" x 23" | 1 |
| 24 | - | 7800063 | ADAPTER, AERO. 2021-8-8S | 1 |
| 23 | C | G-2400076-1 | HOSE ASSY. 1/2" x 25" | 1 |
| 22 | C | 2400063-8 | " " 3/4" x 26 3/8" | 1 |
| 21 | B | 2226743 | RING | 1 |
| 20 | D | 2232514 | LEVER | 1 |
| 19 | C | 2232513 | LEVER | 2 |

1613960

NS

| | | | | |
|---|---|---|---|---|
| 18 | B | 2226815 | CLUTCH, 15" DBL. | 1 |
| 17 | D | 816-1894 | GASKET | 4 |
| 16 | C | 1613535 | SHAFT, CROSS | 1 |
| 15 | A | G-1613534 | SKID, ENGINE | 1 |
| 14 | D | 1613961 | ENGINE ONLY | 1 |
| 13 | D | 1613924 | ADAPTER | 2 |
| 12 | D | 1613523 | DRIVER | 2 |
| 11 | D | 1612560 | PLATE, RETAINER | 1 |
| 10 | A | 1612530 | HOUSING, CLUTCH | 1 |
| 9 | D | 1613530 | PUMP, BOOM NO137 | 1 |
| 8 | D | 1612527 | " , MAIN NO137 | 1 |
| 7 | D | G-1815251 | " , SWING | 1 |
| 6 | D | 1612526 | SHIM, 1/64" SOLID | 2 |
| 5 | D | 1612525 | SHIM, 1/16" CAST | 6 |
| 4 | C | 1612918 | LEVER | 1 |
| 3 | C | 1612917 | COVER | 1 |
| 2 | C | G-1613563 | BRACKET | 1 |
| 1 | A | G-1614550 | ASSY., TRIPLE PUMP DRIVE | 1 |

| | | | | |
|---|---|---|---|---|
| 100 | - | | | |
| 99 | - | 6100037 | HOSE, AERO. 2651-20 1 1/4" x 0°-60° CL | 1 |
| 96 | - | 7803173 | FITTING, AERO. 412-20-24S | 1 |
| 97 | - | 7813063 | TYRAP | 25 |
| 96 | - | 7600842 | TUBING, SHLD. STL. 1/2" O.D. x 3/8" I.D. x 3/64" Lg. | 3 |
| 95 | - | " | " " " " " 72" " | 3 |
| 94 | - | 7803160 | SCREW, SHLD. 5/16" x 1 3/4" | 3 |
| 93 | - | 6300063 | NUT, HEX JAM 5/8"-18 | 3 |
| 92 | - | 6310061 | NUT, FLEXLOC ESNC-620 3/8"-24 | 3 |
| 91 | - | 7803015 | JOINT, BALL | 3 |
| 90 | C | 1617456 | CYLINDER | 3 |
| 89 | D | 1617539 | BRACKET | 3 |
| 88 | D | 1617542 | ARM | 3 |
| 87 | - | 6300061 | NUT, HEX JAM 3/4"-16 LH C.P. | 1 |
| 86 | - | 7804017 | END | 1 |
| 85 | - | G-7802460 | CYLINDER | 1 |
| 84 | - | 7800069 | ASSY., PIN | 1 |
| 83 | C | G-1613934 | ADAPTER | 1 |
| 81 | D | 1613523 | COVER | 2 |
| 81 | - | 7813208 | SWIVEL, AERO. 2066-8-8S | 1 |

DOCUMENTO ILEGIVEL, ORIGINAL ENCONTRA-SE NA TI/UNBC.

ENGINE CAT. CAT 3408 DITA
GS-4333 01 "ENGINE NO

1614826

| REV | DESCRIPTION | CHK'D BY | DATE | C.O. |
|---|---|---|---|---|
| A | REDRAWN W/O CHG'S | JC | 12-16-82 | 82-594 |

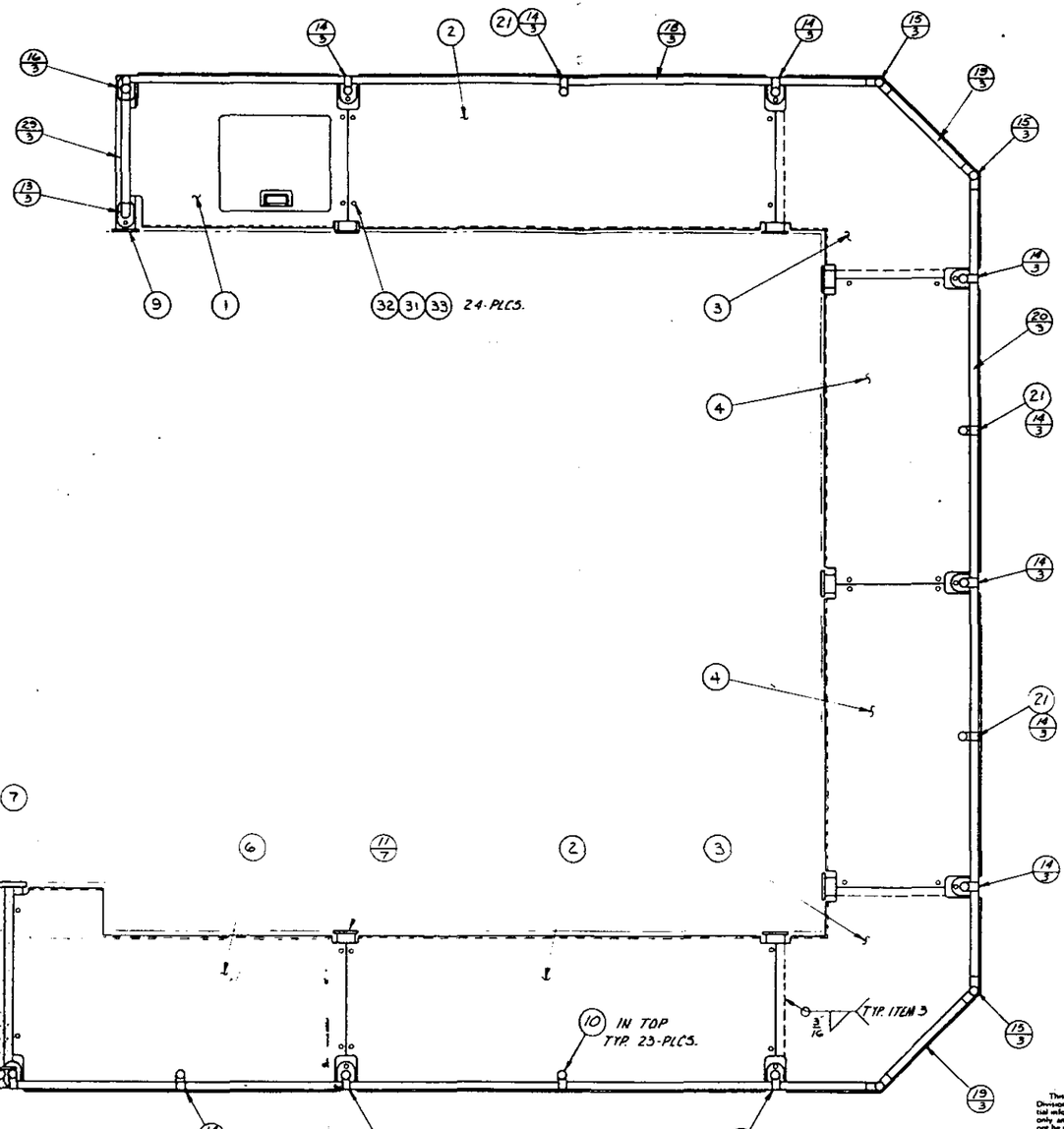


NOTE:
SURFACE PREPARATION TO BE PER NSCo SPECIFICATION PP-108

FAVOR CONSULTAR NO SISTEMA, POIS PODERÁ EXISTIR REVISÕES MAIS ATUALIZADAS.

**DOCUMENTO ILEGIVEL, ORIGINAL ENCONTRA-SE NA TI/UNBC.**

| | | | | | | |
|---|---|---|---|---|---|---|
| 42 | - | 6300121 | NUT, HEX. 3/4" CAD. PL. | .1 | 24 | |
| 41 | - | 7000439-11 | SCREW-HEX HD CAP 3/4"x1 3/4" GR 5 CP | .3 | 24 | |
| 40 | - | 6300041 | NUT-HEX 1/4" CP | .1 | 10 | |
| 39 | - | 76190033 | WASHER-SPRING LOCK 1/4" CP | .1 | 10 | |
| 38 | - | 76190066 | WASHER-SPRING LOCK 3/4" CP | .1 | 30 | |
| 37 | - | 7000108-11 | SCREW-HEX HD CAP 1/4"x1" GR 5 CP | .1 | 10 | |
| 36 | - | 7000440-11 | SCREW-HEX HD CAP 3/4"x2" GR 5 CP | .3 | 6 | |
| 35 | | | | | | |
| 34 | | | | | | |
| 33 | - | 6300081 | NUT-HEX 1/2" CP | .1 | 24 | |
| 32 | - | 7000306-11 | SCREW-HEX HD CAP 1/2"x1 3/4" GR 5 CP | .1 | 24 | |
| 31 | - | 76190050 | WASHER-SPRING LOCK 1/2" CP | .1 | 52 | |
| 30 | - | 7000303-11 | SCREW-HEX HD CAP 1/2"x1" GR 5 CP | .1 | 28 | |
| 29 | - | 6701237 | PIPE, STD GALV. P.E. SCH 40 1 1/2"x 0'-26" | 5.9 | 3 | |
| 28 | - | 6701237 | PIPE, STD. GALV. P.E. SCH 40 1 1/2"x 0'-42" | 9.5 | M | |
| 27 | - | 6701237 | PIPE, STD GALV. P.E. SCH 40 1 1/2"x 0'-15" | 3.4 | 3 | |
| 26 | - | 6701237 | PIPE, STD. GALV. P.E. SCH 40 1 1/2"x 0'-34 1/2" | 7.8 | 3 | |
| 25 | - | 6701237 | PIPE, STD. GALV. P.E. SCH 40 1 1/2"x 0'-30 1/2" | 6.9 | 3 | |
| 24 | - | 6701237 | PIPE, STD. GALV. P.E. SCH 40 1 1/2"x 16'-3" | 44.2 | 3 | |
| 23 | - | 6701237 | PIPE, STD. GALV. P.E. SCH 40 1 1/2"x 0'-32 1/4" | 7.3 | 4 | |
| 22 | | | | | | |
| 21 | | 6701237 | PIPE, STD. GALV. P.E. SCH 40 1 1/2"x 0'-39" | 8.8 | 5 | |
| 20 | - | 6701237 | PIPE, STD. GALV. P.E. SCH 40 1 1/2"x 16'-0" | 43.5 | 3 | |
| 19 | - | 6701237 | PIPE, STD. GALV. P.E. SCH 40 1 1/2"x 0'-23 7/8" | 5.4 | 6 | |
| 18 | - | 6701237 | PIPE, STD. GALV. P.E. SCH 40 1 1/2"x 14'-2 1/2" | 38.4 | 3 | |
| 17 | - | 78185189 | SUPPORT-RAIL, KEE KLAMP #70-B | 1.5 | 5 | |
| 16 | - | 78190174 | TEE-CROSSOVER KEE KLAMP #46-B | 1.8 | 9 | |
| 15 | - | 7818318 | SWIVEL-ADJUST NU-RAIL #30-C | 2.0 | 12 | |
| 14 | - | 7802274 | CROSSOVER, KEE KLAMP #45-B | 1.2 | 45 | |
| 13 | - | 78190172 | TEE, KEE KLAMP #10-B | 1.3 | 3 | |
| 12 | - | 7805107 | FLANGE, KEE KLAMP #62-B | 2.2 | 14 | |
| 11 | B | 16088813 | SUPPORT, CATWALK | 31 | 7 | |
| 10 | | 78100121 | KNOB, KEE KLAMP #81-B | .3 | 23 | |
| 9 | B | 16088812 | SUPPORT, CATWALK R.H. FRONT | 58 | 1 | |
| 8 | B | 16088819 | GATE, CATWALK | 45 | 1 | |
| 7 | A | 16148311 | FLOOR, CATWALK L.H. FRONT EXT. | 314 | 1 | |
| 6 | A | 16148291 | FLOOR, CATWALK L.H. FRONT | 206 | 1 | |
| 5 | | | | | | |
| 4 | B | 16148351 | FLOOR, CATWALK R.H.-L.H. REAR | 180 | 2 | |
| 3 | B | 16088051 | FLOOR, CATWALK R.H.-L.H. REAR CORNER | 133 | 2 | |
| 2 | B | 16088041 | FLOOR, CATWALK R.H.-L.H. CTR. | 247 | 2 | |
| 1 | B | 16088031 | FLOOR, CATWALK R.H. FRONT | 128 | 1 | |

PROPRIETARY INFORMATION

This document contains National Supply Co. Division of Armco Inc. proprietary and confidential information. It is loaned for limited purposes only and remains the property of Armco. It may not be reproduced in whole or in part without the written consent of Armco, and must not be disclosed to persons not having need of such disclosure consistently with the purpose of the loan. The document is to be returned to Armco upon request and in all events upon completion of the use for which it was loaned

ADDED-12-9-82

MATERIAL

WEIGHT: 2880 lbs

SPECIFICATIONS

VENDOR | HARDNESS

ITEM NO. | PART NUMBER OR SIZE | DESCRIPTION | MATL WT. | REQ'D

ALLOWABLE MACHINE TOLERANCES UNLESS OTHERWISE SPECIFIED

SURFACE FINISH RMS

FRACTIONS ± DEC ANGLES ± 0°30'

SCALE 3/8" = 1'-0"

Armco National Supply Company
Division of Armco Steel Corporation
Bessemer, Texas 76240

CATWALK-CPT
09-435 (LONG)

SUPERVISOR A | ISSUE | ASSIGN 12-16-82 | BY BKC | SIZE A | PART NUMBER 1614826

ASSEMBLY — WELD — PURCHASED

1614826 A1

| REV. | DESCRIPTION | CHK'D BY | DATE | C.N. |
|---|---|---|---|---|
| A | ADDED ADJUSTMENT NOTE | LDL | 5-1-80 | NONE |
| B | WAS 2 REQ'D. | JCF | 6-9-82 | 82-3574 |

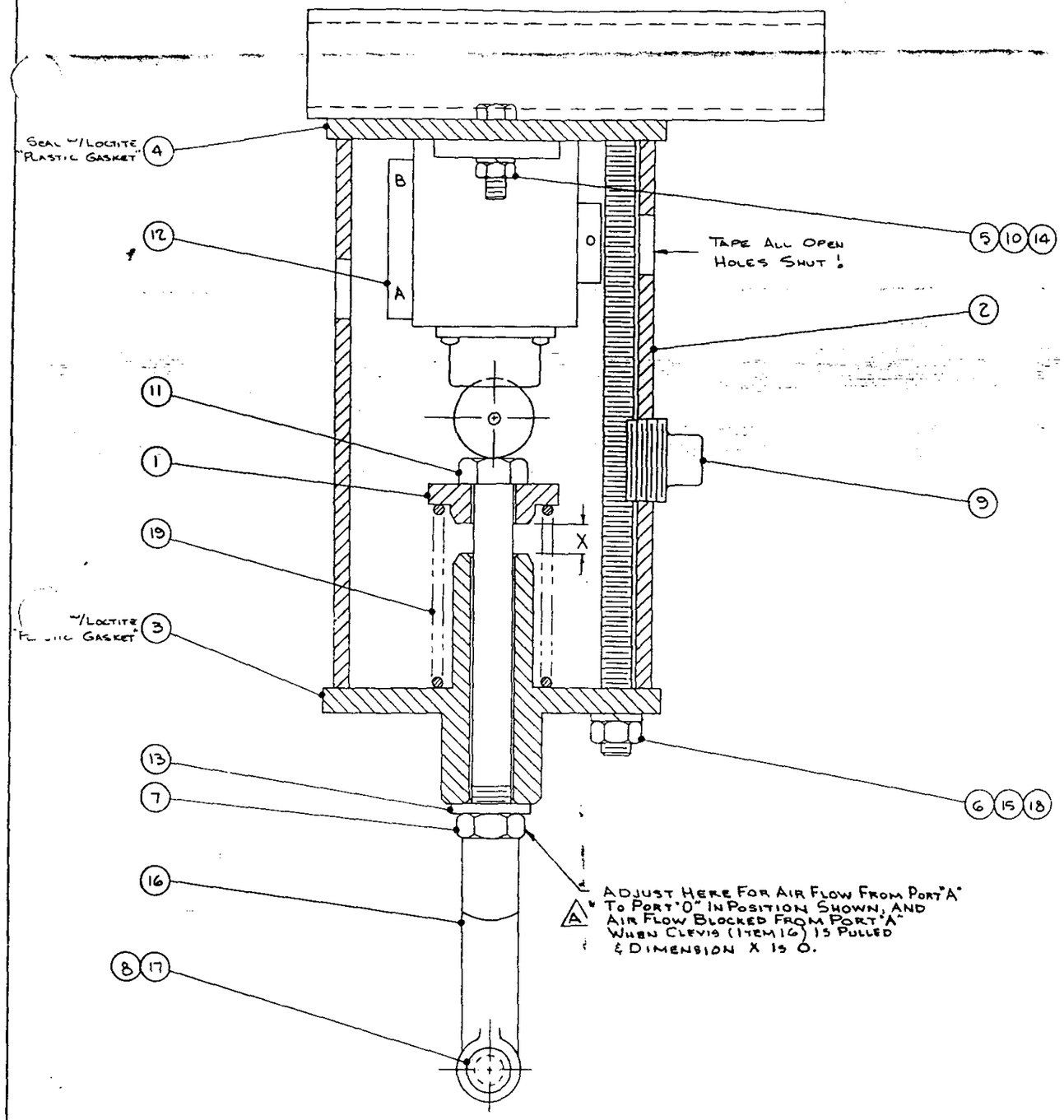


DOCUMENTO ILEGIVEL, ORIGINAL ENCONTRA-SE NA TI/UNBC.

FAVOR CONSULTAR NO SISTEMA, POIS PODERA EXISTIR REVISÕES MAIS ATUALIZADAS.

G-1615925

REV. B

(17)

| ITEM | REV. | PART NUMBER | DESCRIPTION | REQ'D. |
|---|---|---|---|---|
| 19 | - | G-7818117 | SPRING | 1 |
| 18 | - | 7817131 | ROD, THREADED 3/8"-16 x 8 1/2" LG. | 2 |
| 17 | - | 7815016 | PIN, C.C. #CP-113 | 1 |
| 16 | - | 7802345 | CLEVIS, C.C. # AC-225 | 1 |
| B1 15 | - | 7619041 | WASHER, REC. SPR. LOCK 3/8" CAD. PL. | 4 |
| 14 | - | 7619033 | WASHER, REC. SPR. LOCK 1/2" CAD. PL. | 2 |
| 13 | - | 7600032 | WASHER, 1/2" N. TYPE A 1.062" O.D. | 1 |
| 12 | - | G-7500327 | VALVE | 1 |
| 11 | - | G-7000320-30F | SCREW, H.H. CAP 1/2"-20 U.N.F. x 5" SST | 1 |
| 10 | - | 7000108-11 | SCREW, H.H. CAP 1/4" x 1" GR. 5 CAD. PL. | 2 |
| 9 | - | 6877006 | PLUG, STD. CAST BRASS SOLID SQ. HD. 3/4" | 2 |
| 8 | - | 6500606 | PIN, COTTER 3/32" x 3/4" | 1 |
| 7 | - | 6320081 | NUT, HEX JAM 1/2"-20 CAD. PL. | 1 |
| B1 6 | - | 6300062 | NUT, HEX 3/8" CAD. PL. | 4 |
| 5 | - | 6300041 | NUT, HEX 1/4" CAD. PL. | 2 |
| 4 | C | G-1615921 | PLATE, TOP | 1 |
| 3 | C | G-1615920 | PLATE, BOTTOM | 1 |
| 2 | C | G-1615919 | HOUSING | 1 |
| 1 | D | G-1615917 | GUIDE | 1 |

MATERIAL

VENDOR | HARDNESS

ARMCO National Supply Division
Armco Steel Corporation
Gainesville Plant, Gainesville, Texas

ALLOWABLE MACHINE TOLERANCES UNLESS OTHERWISE SPECIFIED: FRACTIONS ± .015" ANGLES ± 0° 30'

SCALE 1" = 1'-0"

BOOM SAVER ASSEMBLY, OS-45

SUPERSEDES | DATE 10/17/78 | BY KAR | SIZE B | PART NUMBER G-1615925

ASSEMBLY NUMBER 1615086 | CHECKED

1614291

| ITEM | DWG. | PART NO. | DESCRIPTION | REQ'D |
|---|---|---|---|---|
| 1 | C | 1614292 | BLOCK, SOLENOID MTG. | 1 |
| 2 | | 7804220 | ELBOW W/H # 1469 x 4K | 2 |
| 3 | | 2410022-012 | O-RING | 4 |
| 4 | | 7818360 | SCREW HEX. SOC. HD. CP. #10-24x3" | 4 |
| 5 | D | 7500362 | VALVE, FOUR WAY, THREE POSITION | 1 |
| 6 | | G7612008 | WASHER, #10 HI COLLAR SPR LK | 4 |

NOTE
DIRECTIONAL CONTROL VALVE COMES WITH 4-"O" RINGS, SAME AS ITEM 3.

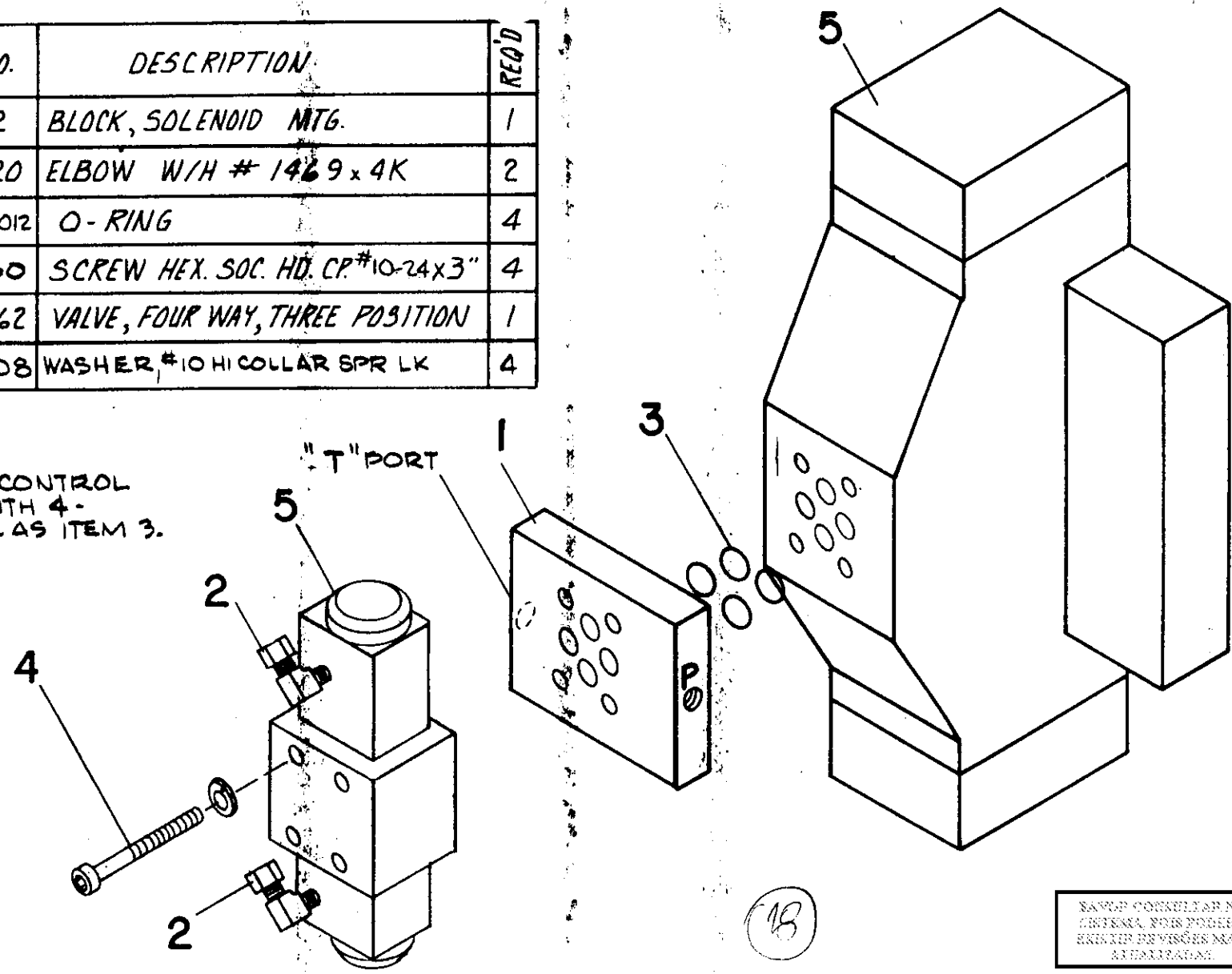


18

SAVOP CONSULTAR NO SISTEMA, POIS PODERÁ EXISTIR REVISÕES MAIS ATUALIZADAS.

OS-215 & OS-435 W/AIR CONTROLS

| REV. | DESCRIPTION | CHK'D BY | DATE | C. N. |
|---|---|---|---|---|

TERIAL

ARMCO National Supply Company
Division of Armco
Gainesville, Texas 76240

# VALVE, REXROTH SELECTOR

| | | | | | | | | |
|---|---|---|---|---|---|---|---|---|
| ROOR | HARDNESS | ALLOWABLE MACHINE TOLERANCES UNLESS OTHERWISE SPECIFIED | FRACTIONS ± .015" ANGLES ± 0° 30' | SUPERSEDES D-G-1614251 | DRAWN 7-21-81 | BY FIELDER | SIZE D | PART NUMBER 1614291 |
| | | SURFACE FINISH RMS | SCALE NONE | ASSEMBLY NUMBER | CHECKED 8-21-81 | BY JEC3 | | |

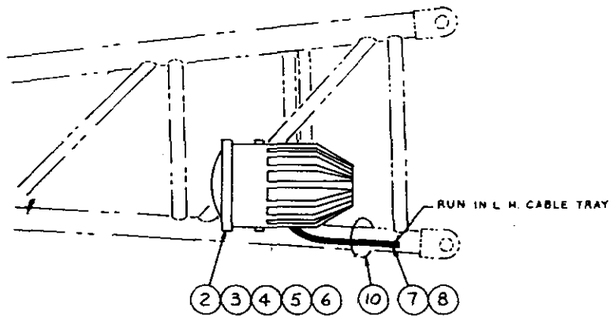


SHEAVE ILLUMINATION

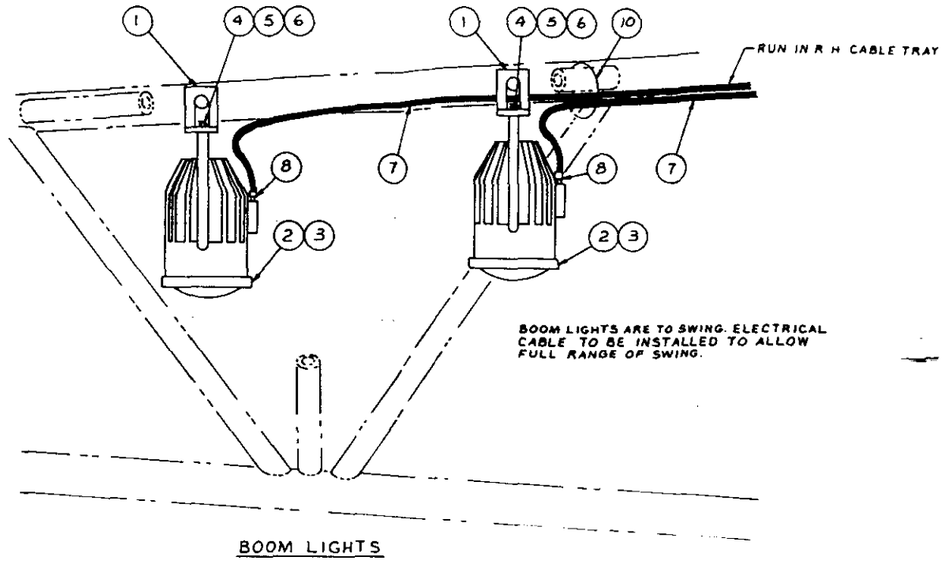


BOOM LIGHTS

| BOOM LENGTH | LENGTH OF CABLE (7802469-001) REQ'D. | | |
|---|---|---|---|
| 60' | 65' | 80' | 145' |
| 80' | 85' | 120' | 205' |
| 90' | 95' | 140' | 235' |
| 100' | 105' | 160' | 265' |
| 120' | 125' | 200' | 325' |
| 130' | 135' | 220' | 355' |
| 140' | 145' | 240' | 385' |
| 150' | 155' | 260' | 415' |
| | 01-1612008-813 SHEAVE ILLUMINATION ONLY | 02-1612008-813 BOOM LIGHTS ONLY | 03-1612008-813 SHEAVE ILLUM. AND BOOM LIGHTS |

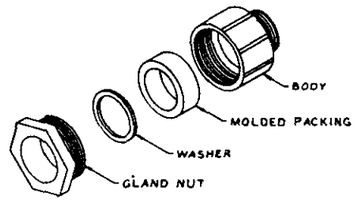


BRASS TERMINAL TUBE
ITEM 13

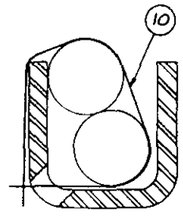


CABLE TRAY

FAVOR CONSULTAR NO SISTEMA, POIS PODERIA EXISTIR REVISÕES MAIS ATUALIZADAS.

DOCUMENTO ILEGIVEL, ORIGINAL ENCONTRA-SE NA TI/UNBC.

| | | | | | | |
|---|---|---|---|---|---|---|
| 22 | - | 6300041 | NUT, HEX ¼" CAD. PLTD. | 2 | 2 | 4 |
| 21 | - | 7621016 | WASHER, TYPE A ¼" CAD. PLTD. | 2 | 2 | 4 |
| 20 | - | 7619033 | WASHER, REG. SPG. LOCK ¼" CAD. PLTD. | 2 | 2 | 4 |
| 19 | - | 7000108-11 | SCREW, H.H. CAP ¼"X1" CAD. PLTD. | 2 | 2 | 4 |

1612008-813

REV

| | | | | | | |
|---|---|---|---|---|---|---|
| 18 | - | 7819094 | TERMINAL, API-AMP 31902 | 6 | 12 | 18 |
| 17 | D | 7815242-002 | PLUG, PIPE BRASS ¾" | 2 | - | 2 |
| 16 | D | 7815199-002 | PACKING, MOLDED CABLE ½" | 1 | 2 | 3 |
| 15 | - | 6600062-8 | BUSHING, PARKER PTR-8 ¾" X ½" | 1 | 2 | 3 |
| 14 | D | 7801234-003 | BOX, JUNCTION WATERTIGHT | 1 | 1 | 2 |
| 13 | D | 7819662-002 | TUBE, MALE TERMINAL ½" | 1 | 2 | 3 |
| 12 | - | 7802555 | CABLE, ANIXTER TSG 4 14-2 | 30 | 40 | 70 |
| 11 | - | 7815242-003 | PLUG, PIPE BRASS 1" | 2 | 2 | 4 |
| 10 | - | 7819048 | TY-RAP | 10 | 10 | 20 |
| 9 | - | 7802512-004 | CONNECTOR, BULKHEAD HEYCO 3219 | 1 | 2 | 3 |
| 8 | - | 7806042-008 | GLAND, HAWKE TYPE 501/453-0X-¾"NPT | 2 | 4 | 6 |
| 7 | - | 7802469-001 | CABLE, PIRELLI 600/1000V 1.5X3 COND. | SEE TABLE | | |
| 6 | - | 7000396-11 | SCREW, H.H. CAP ⅝" X 1¾" CAD. PLTD. | 1 | 2 | 3 |
| 5 | - | 7619058 | WASHER, REG. SPG. LOCK ⅝" CAD. PLTD. | 1 | 2 | 3 |
| 4 | - | 6300103 | NUT, HEX ⅝" CAD. PLTD. | 1 | 2 | 3 |
| 3 | - | 7811011 | LAMP, 400W MERCURY VAPOR | 1 | 2 | 3 |
| 2 | - | 7805159 | FIXTURE, LIGHT | 1 | 2 | 3 |
| 1 | C | 1615974 | HANGER | - | 2 | 2 |
| | | | | | 01-1612008-813 | 02-1612008-813 |

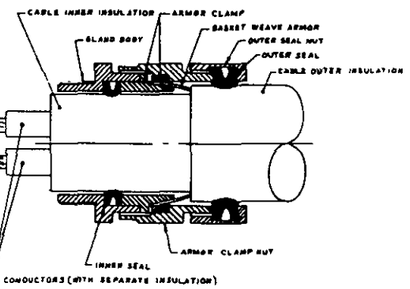


TYPICAL GLAND & CABLE INSTALLATION
ITEM 8

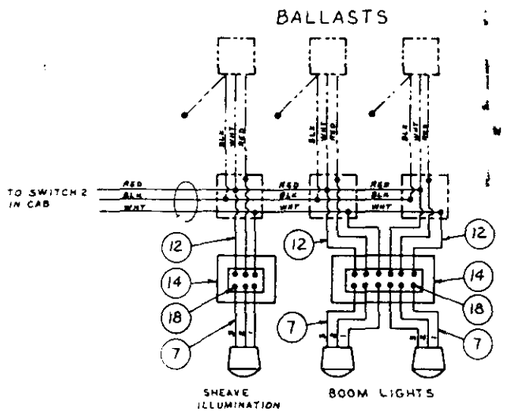


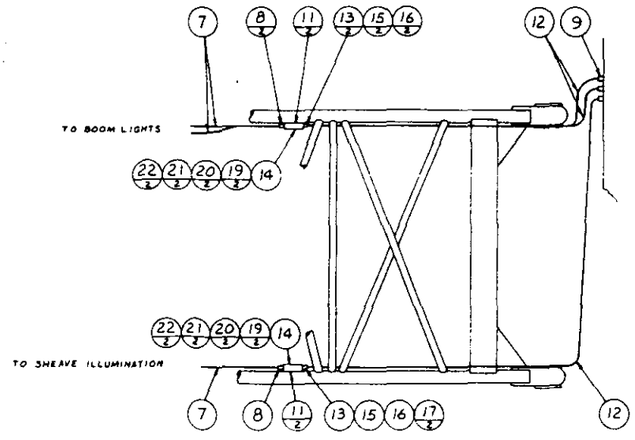


BOOM BASE

| | | | | | |

# APPENDIX

GUINDASTE DE BB.

# NATIONAL OS-435 [illegible] TAL CRANE
## API LOAD RATINGS*
## 120 FT. (36.6 m) BOOM
## (7 PARTS LINE MAXIMUM)

### MAIN HOIST MAXIMUM LIFTING CAPACITIES

| RADIUS ft | (m) | BOOM ANGLE | RATED LOADS lbs | (kgs) | †MIN. LINE PARTS LOW SPEED | HIGH SPEED |
|---|---|---|---|---|---|---|
| 30 | ( 9.1) | 78° | 119 400 | (54 150) | 7 | ** |
| 35 | (10.7) | 75° | 119 400 | (54 150) | 7 | ** |
| 40 | (12.2) | 73° | 119 400 | (54 150) | 7 | ** |
| 45 | (13.7) | 70° | 110 700 | (50 210) | 7 | ** |
| 50 | (15.2) | 66° | 98 430 | (44 640) | 6 | 7 |
| 55 | (16.8) | 65° | 88 390 | (40 090) | 6 | 6 |
| 60 | (18.3) | 61° | 80 [illegible] | (36 300) | 5 | 6 |
| 65 | (19.8) | 60° | 72 [illegible] | (33 090) | 5 | 5 |
| 70 | (21.3) | | 66 880 | (30 330) | 4 | 5 |
| 75 | (22.9) | 54° | 61 820 | (27 950) | 4 | 4 |
| 80 | (24.4) | 51° | 57 020 | (25 860) | 4 | 4 |
| 85 | (25.9) | 48° | 52 960 | (24 020) | 4 | 4 |
| 90 | (27.4) | 45° | 49 350 | (22 380) | 3 | 4 |
| 95 | (29.0) | 41° | 46 120 | (20 910) | 3 | 3 |
| 100 | (30.5) | 38° | 43 220 | (19 600) | 3 | 3 |
| 105 | (32.0) | 33° | 40 590 | (18 410) | 3 | 3 |
| 110 | (33.5) | 29° | 38 200 | (17 320) | 3 | 3 |
| 115 | (35.1) | 23° | 36 020 | (16 330) | 3 | 3 |
| 120 | (36.6) | 16° | 34 020 | (15 430) | 2 | 3 |
| 125 | (38.1) | 0° | 31 580 | (14 320) | 2 | 2 |

** USE LOW SPEED

### WHIP HOIST MAXIMUM LIFTING CAPACITIES

| RADIUS ft | (m) | BOOM ANGLE | RATED LOAD LOW SPEED lbs | (kgs) | HIGH SPEED lbs | (kgs) |
|---|---|---|---|---|---|---|
| 30 to 133 | ( 9.1) to (40.5) | 80° to 0° | 18 100 | (8 210) | 13 970 | (6 330) |

EACH RATED LOAD SHOWN IN THE CHART IS TOTAL SUSPENDED LOAD. THIS INCLUDES HOISTING TACKLE, HOOK, HOOK BLOCK, SLINGS, AND ANY OTHER LOAD HANDLING GEAR. HOISTING TACKLE MUST BE SUBTRACTED FROM LOAD RATINGS TO [illegible] ALLOWABLE HOOK LOADS.

WEIGHT OF HOOK BLOCKS AND BALL

| | | | | |
|---|---|---|---|---|
| 3 SHEAVE BLOCK (60 TON) | — | 1 550 lb | — | (703 kg) |
| 2 SHEAVE BLOCK (40 TON) | — | 1 100 lb | — | (500 kg) |
| 1 SHEAVE BLOCK (20 TON) | — | 700 lb | — | (318 kg) |
| OVERHAUL BALL (WHIP) | — | 480 lb | — | (218 kg) |

WEIGHT OF WIRE ROPE

| | | | | |
|---|---|---|---|---|
| MAIN HOIST | — | 1.46 lb/ft | — | (2.18 kg/m) |
| WHIP HOIST | — | 1.89 lb/ft | — | (2.81 kg/m) |

WIRE ROPE USED TO HANDLE EACH RATED LOAD MUST BE 7/8 IN. (22 mm) DIA. 10x19 EIPS RR IWRC OF WITH A MINIMUM BREAKING STRENGTH OF 79 600 LBS. (36 100 kgs) FOR THE MAIN HOIST AND 1 IN. (25 mm) DIA. 6x26 IWRC EIPS WITH A MINIMUM BREAKING STRENGTH OF 103 400 LBS. (46 900 kgs) FOR THE BOOM HOIST.

WIRE ROPE USED ON THE WHIP HOIST MUST BE 1 IN. (25 mm) DIA. 19x7 IWRC EIPS. [illegible] ROTATING WITH A MINIMUM BREAKING STRENGTH OF 84 400 LBS. (38 [illegible]).

WIRE [illegible] OF EQUAL SIZE, STRENGTH, FLEXIBILITY AND CRUSH RESISTANCE MAY BE SUBSTITUTED.

**! CAUTION !**

THE OPERATION OF THE CRANE DURING PERIODS OF HIGH WIND VELOCITY IS DANGEROUS. DAMAGE MAY OCCUR FROM HIGH STRESS ON THE CRANE STRUCTURE OR SUSPENDED LOADS BEING TOSSED ABOUT AND COLLIDING WITH THE CRANE OR OTHER STRUCTURES.

* LOAD RATINGS ARE IN COMPLIANCE WITH API SPECIFICATION 2C "OFFSHORE CRANES" IN EFFECT AT THE TIME OF CRANE DESIGN.

† 'MINIMUM LINE PARTS' IS BASED ON SAFE WORKING LOAD OF THE WIRE ROPE AND WINCH CAPABILITY. CAPACITY OF HOOK AND BLOCK MUST ALSO BE CONSIDERED.

2407250-011

120.1

FACT SHEET

# NATIONAL OS-435 hydraulic pedestal crane

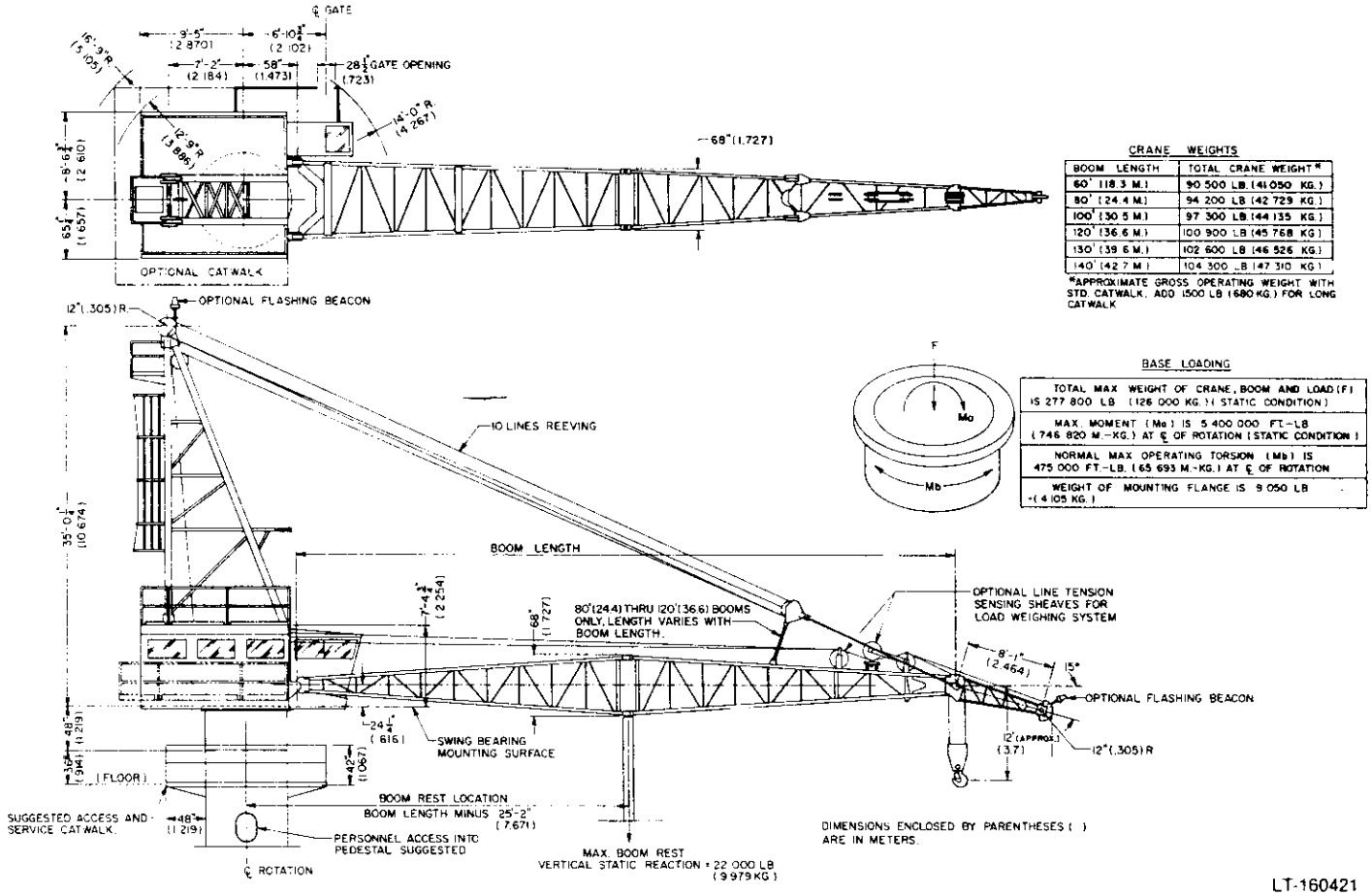


CRANE WEIGHTS

| BOOM LENGTH | TOTAL CRANE WEIGHT* |
|---|---|
| 60' (18.3 M.) | 90 500 LB. (41 050 KG.) |
| 80' (24.4 M.) | 94 200 LB. (42 729 KG.) |
| 100' (30.5 M.) | 97 300 LB. (44 135 KG.) |
| 120' (36.6 M.) | 100 900 LB. (45 768 KG.) |
| 130' (39.6 M.) | 102 600 LB. (46 526 KG.) |
| 140' (42.7 M.) | 104 300 LB. (47 310 KG.) |

*APPROXIMATE GROSS OPERATING WEIGHT WITH STD. CATWALK. ADD 1500 LB (680 KG.) FOR LONG CATWALK

BASE LOADING

| |
|---|
| TOTAL MAX. WEIGHT OF CRANE, BOOM AND LOAD (F) IS 277 800 LB. (126 000 KG.) (STATIC CONDITION) |
| MAX. MOMENT (Mo) IS 5 400 000 FT-LB. (746 820 M.-KG.) AT ℄ OF ROTATION (STATIC CONDITION) |
| NORMAL MAX. OPERATING TORSION (Mb) IS 475 000 FT.-LB. (65 693 M.-KG.) AT ℄ OF ROTATION |
| WEIGHT OF MOUNTING FLANGE IS 9 050 LB. (4 105 KG.) |

LT-160421

### ROTATING FRAME

The main frame is of all-welded, deep beam construction, utilizing low temperature steels at critical stress points. The machinery compartment is completely enclosed to afford sheltered access to machinery. Entrance to the compartment is from an external walkway.

### MAIN AND FAST LINE HOIST

Both have two-stage planetary reduction systems completely enclosed within an oil-tight case to lubricate gears and bearings during drum rotation. Power controlled load lowering is standard.

One variable displacement, axial piston pump powers individual reversible motors on each drum.

### BOOM HOIST

The boom hoist is a two-stage planetary reduction system enclosed within an oil-tight case to lubricate gears and bearings during drum rotation. Power controlled load lowering and automatic safety lock pawl are provided.

The reversible axial piston motor, on the winch, is powered by a variable displacement axial piston pump.

### SWING

Rotation of the crane is by a dual system, incorporating two reversible axial piston motor driven three-stage reduction drives, with anti-friction bearings and oil-tight cases. Each drive is equipped with a totally enclosed, spring actuated, hydraulically released brake on the gear reducer input shaft.

### SWING BEARING

The swing bearing is a forged alloy steel, shear ball bearing, with the ball races hardened and ground. The gear teeth are an integral part of the outer race. The bearing is suitable for low temperature service.

### BRAKES

The hoist brakes are external band-type with single point adjustment; spring set and hydraulically released.

The swing brakes are disc type, spring set and hydraulically released.

### CAB

The cab is heavy gage steel, rubber cushion mounted, and extends forward of the frame to give the operator excellent visibility in all directions. The full height, self-latching, hinged door swings to the rear. Cab interior includes adjustable seat and full instrument panel with controls positioned for ease of operation.

### BOOM

A 60-foot lattice type, pin connected, tubular steel boom incorporating high strength low alloy steels with an 8-foot offset sheave extension is standard. The open throat boom point has five sheaves, with one sheave in the offset extension. All sheaves are roller bearing mounted. The wide boom foot spread allows for the list conditions that are present in off shore applications. 20-foot, 30-foot, and 40-foot extension sections are available. Boom lengths to 180 ft. are available.

### GANTRY

The high gantry arrangement affords greater capacity at shallow boom angles.

### HYDRAULIC SYSTEM

The closed loop, "hydrostatic transmission" hydraulic system provides simultaneous individual speed control of the three primary functions, swing, boom and hoist, while allowing the engine to operate at peak efficiency. Hydraulic fluid is filtered by a suction line filter and high pressure filters in each loop. Thermostatically controlled, return line, air cooling is provided to maintain optimum fluid temperature.

MANUFACTURER RESERVES THE RIGHT TO CHANGE SPECIFICATIONS AND/OR DESIGN WITHOUT NOTICE.

# PEDESTAL CRANES

ARMCO National Supply Company

## HOIST DRUMS

| DRUM | WIRE ROPE | DRUM PITCH DIA. in | DRUM PITCH DIA. (mm) | LAYER OF ROPE | LINE SPEED LOW SPEED ft/min | LINE SPEED LOW SPEED (m/min) | LINE SPEED HIGH SPEED ft/min | LINE SPEED HIGH SPEED (m/min) | ROPE CAPACITY ft | ROPE CAPACITY (m) |
|---|---|---|---|---|---|---|---|---|---|---|
| Main Hoist | 7/8" 6 x 26 IWRC EIPS Breaking Strength 79 600 lb (36 100 kg) | 19.9 | (505) | 1st | 218 | ( 66) | 264 | ( 80) | 210 | ( 64) |
| | | 22.9 | (582) | 3rd | 252 | ( 77) | 305 | ( 93) | 670 | (204) |
| | | 30.4 | (772) | 8th | 334 | (102) | 405 | (123) | 2 100 | (640) |
| Whip Line Hoist | 1" 19 x 7 IWRC EIPS Non-Rotating Breaking Strength 84 400 lb (38 250 kg) | 20.0 | (508) | 1st | 220 | ( 67) | 266 | ( 81) | 180 | ( 55) |
| | | 23.5 | (597) | 3rd | 258 | ( 79) | 312 | ( 95) | 590 | (180) |
| | | 26.8 | (681) | 5th | 295 | ( 90) | 356 | (108) | 1 070 | (326) |
| Boom Hoist | 1" 6 x 26 IWRC EIPS 10 Parts Reeving Breaking Strength 103 400 lb (46 900 kg) | 20.0 | (508) | 1st | 220 | ( 67) | — | — | 83 | ( 25) |
| | | 23.5 | (597) | 3rd | 258 | ( 79) | — | — | 272 | ( 83) |
| | | 28.8 | (730) | 6th | 315 | ( 96) | — | — | 590 | (180) |

## MAIN HOIST

| PARTS OF LINE | MAXIMUM RATED LOAD* LOW SPEED lbs | (kg) | HIGH SPEED lbs | (kg) | **HOOK SPEED LOW SPEED ft/min | (m/min) | HIGH SPEED ft/min | (m/min) | MAX HOOK TRAVEL ft | (m) |
|---|---|---|---|---|---|---|---|---|---|---|
| 1 | 17 060 | ( 7 738) | 12 000 | ( 5 400) | 252 | (77) | 305 | (93) | 2 090 | (637 |
| 2 | 34 110 | (15 472) | 25 500 | (11 550) | 126 | (38) | 152 | (46) | 1 045 | (319) |
| 3 | 51 170 | (23 211) | 38 500 | (17 450) | 84 | (26) | 102 | (31) | 695 | (212) |
| 4 | 68 230 | (30 949) | 51 100 | (23 150) | 63 | (19) | 76 | (23) | 520 | (159) |
| 5 | 85 290 | (38 733) | 63 500 | (28 800) | 50 | (15) | 60 | (18) | 415 | (127) |
| 6 | 102 340 | (46 421) | 75 700 | (34 300) | 42 | (13) | 50 | (15) | 350 | (107) |
| 7 | 119 400 | (54 160) | 86 700 | (39 200) | 36 | (11) | 43 | (13) | 300 | ( 91) |
| 8 | 136 460 | (61 898) | 98 300 | (44 550) | 31 | (10) | 37 | (11) | 260 | ( 80) |
| 9 | 153 510 | (69 632) | 109 800 | (49 800) | 28 | ( 9) | 34 | (10) | 230 | ( 70) |
| 10 | 170 570 | (77 371) | 121 200 | (54 900) | 25 | ( 8) | 30 | ( 9) | 210 | ( 64 |

**Based on 3rd layer. *Based on 8th layer.

## WHIP LINE HOIST

| | | |
|---|---|---|
| Max. Load *(Low Speed) | 18 100 lb | (8 200 kg) |
| Max. Load *(High Speed) | 13 970 lb | (6 330 kg) |
| Hook Speed (Low)** | 258 ft/min | (79 m/min) |
| Hook Speed (High)** | 312 ft/min | (95 m/min) |
| Max. Hook Travel | 1 040 ft | (317 m) |

**Based on 3rd layer. *Based on 5th layer.

## PENDANT LINES

Two — 2-1/4" 6 x 19 IWRC EIPS Galvanized Lines

Breaking Strength Each
444 600 lb (201 650 kg)

| | |
|---|---|
| SWING SPEED | 1.7 RPM |

| | |
|---|---|
| LUFFING TIME | ~ 70 sec. (0° to 80°) |

## POWER

| MAKE | MODEL | TYPE | CYL. | RATED BRAKE H.P. |
|---|---|---|---|---|
| CAT | 3408 DITA | Diesel | 8 | 365 @ 1800 RPM |
| G.M. | 12V-71 | Diesel | 12 | 406 @ 1800 RPM |
| | Electric Motor 60 HZ. A.C. | | | 300 @ 1800 RPM |
| Fuel Tank Capacity 130 Gallons (492 Liters) | | | | |
| *Electrical Requirements — 8.5 kw (Incl. 1.5 kw for Lighting) | | | | |
| Starting — 24 v dc or 90 psi air | | | | |

*Not applicable for electric motor.

## BOOM LENGTHS

| | |
|---|---|
| Basic | 60 ft (18.3 m) |
| Extensions | 20 ft ( 6.1 m)<br>30 ft ( 9.1 m)<br>40 ft (12.2 m) |
| Boom Point Extension | 8 ft (24 m) |

NOMINAL RATING: 170 570 lbs. (77 371 kg)
(100 ft Boom At A Working Radius Of 30 ft)

World Headquarters
1455 West Loop South
Houston, Texas 77027
713-906-5111

ARMCO National Supply Company

# CRANE NOMENCLATURE

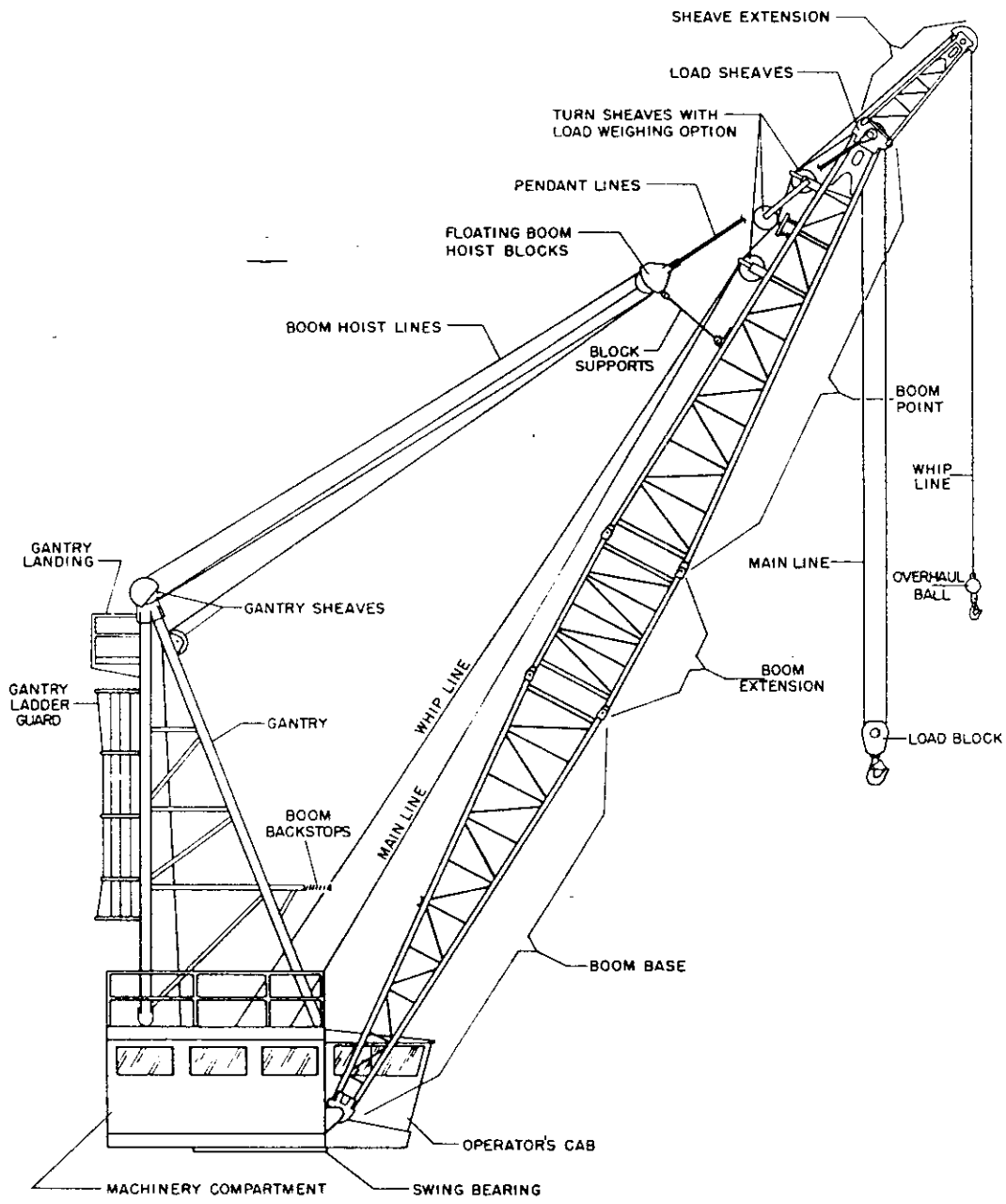


LT-160045

## STANDARDS OF DESIGN AND CONSTRUCTION

The following items were designed to be in compliance with American Petroleum Institute specification 2C "Offshore Cranes":

1. Crane rating
2. Structural competence by stress analysis
3. Structural competence by non-destructive testing
4. Wire rope
5. Sheaves
6. Winch drums
7. Boom, main, and whip hoist mechanisms
8. Swing mechanism
9. Controls
10. Cab
11. All miscellaneous equipment

The following components were designed according to the listed standard, many of which are required by API-2C:

BOOM DESIGN — a) Effective length factors from British Standard 2573 Part I, "Specification for permissible stresses in cranes and design rules."
b) Impact factors are from API-2C or from customer requirements.
c) Basic safety factors and design equations are from the American Institute of Steel Construction (AISC) Manual.

GANTRY DESIGN — AISC
FRAME — AISC
LOAD SHAFTS — AISC
LOAD PINS — AISC

GEARING DESIGN — American Gear Manufactures Association (AGMA)

WELDING — American Welding Society (AWS). Also meets American Bureau of Shipping (ABS) and Det Norske Veritas (DNV) welding requirements.

HYDRAULIC AND PNEUMATIC PRESSURE SYSTEMS — National Fluid Power Association (NFPA)

ELECTRICAL SYSTEMS — National Electric Code (NEC), or other design codes required by the customer.

AMBIENT DESIGN TEMPERATURE — 14°F (−10°C).

The OS-435 standard crane design has been accepted by the following certification agencies:

1. American Bureau of Shipping (ABS)
2. Det Norske Veritas (DNV)
3. Lloyd's Register of Shipbuilding
4. Norwegian Maritime Directorate (NMD)
5. United States Coast Guard (USCG)

## CRANE STRUCTURAL MATERIALS SPECIFICATIONS

| STRUCTURAL COMPONENT | STANDARD MATERIAL SPECIFICATION | NATIONAL SUPPLY COMPANY SPECIFICATION | YIELD STRENGTH, MIN. PSI (N/MM²) |
|---|---|---|---|
| Boom Chords | U.S. Steel T-1 Type A | T-663 | 100,000 (689) |
| Boom Lacing | ASTM A-519, GR. 1025 HR | T-647 | 30,000 (207) |
| Boom Section End Fittings and Point Casting | AISI A-8630 | C-676 | 95,000 (655) |
| Gantry Front and Rear Legs | ASTM A-633 Grade D | M-662 | 50,000 (345) |
| Gantry Lacing Pipe | ASTM A-53 Grade A | — | 30,000 (207) |
| Main Frame Structural Plates, Channels, and Bottom Ring | ASTM A-633 Grade D | M-662 | 50,000 (345) |
| Swing Bearing Material | AISI 4340 | — | 100,000 (689) |
| Main and Whip Load Shafts | AISI A-4145 H | B-115 H-675 | 100,000 (689) |
| Gantry Load Shaft | AISI A-4145 H | B-115 H-129 | 100,000 (689) |
| Boom Base Pins | AISI A-4145 H | B-115 H-675 | 100,000 (689) |
| Boom Section Connecting Pins | ASTM A-564 Grade 630 Cond. 1075 | — | 125,000 (861) |
| Gantry Connection Pins | AISI A-4145 H | B-115 H-675 | 100,000 (689) |
| Mounting Flange — Forged Portion | ASTM A-350 LF-2 | M-668 | 36,000 (248) |
| Mounting Flange — Structural Plates | ASTM A-633 Grade D | M-662 | 50,000 (345) |

MATERIAL CONTROL — All structural materials are traceable by heat numbers on the material, which in turn corresponds to a mill test certificate stating the actual physical and chemical properties of that particular batch (heat) of steel.

## INTRODUCTION

The OS-435 crane incorporates all the standard crane functions and utilizes a lattice type, wire line supported boom and high gantry permitting the reaching out with heavy loads and the use of long booms.

Here, however, is where the similarities end. The OS-435 is a pneumatically controlled hydraulic unit. Each hoist drum is powered by its own hydraulic motor powered by a variable displacement pump. This motor drives through a two stage planetary gear reduction that is completely enclosed within the drum.

The fluid flow to and from each motor is controlled so that the speed of any function (hoist, lower, swing) depends only on the engine speed and how far the control handle is moved from the neutral position. This provides the ultimate in smooth control and ease of operation.

The swing is a completely independent hydraulic circuit. It utilizes a variable displacement pump driving two fixed displacement motors. These motors drive the swing pinions through two totally enclosed three stage gear reducers.

This modern hydraulic approach greatly simplifies maintenance. Rather than one large complex piece of machinery, the hydraulic unit utilizes relatively small, completely independent modules. The modules can be easily removed for repair or replacement.

The OS-435 has only one friction clutch to adjust; this is the throw-out clutch between the prime mover and hydraulic pumps. All heavy braking is done hydraulically. The friction brakes are used only to hold the load while the control handles are in neutral. This provides for long brake life and rare need for brake adjustment.

The brakes and boom hoist lock pawl are spring set and pressure released. All hoist brakes release automatically when the control handles are moved out of the neutral position. All the hoist brakes and boom hoist lock pawl set automatically when the hoist control handles are returned to the neutral position. T' swing brakes are manually released.

A hydraulic drive provides for a more compact design. It also permits a more complete isolation of the operator's cab for more efficient sound and temperature control.

The main frame is of welded steel construction utilizing high strength steels in critical locations. Its deep beam design gives maximum rigidity with minimum weight.

## SAFE OPERATING PRACTICES

1. Know the weight of the load you are lifting.
2. Do not exceed the crane's load chart.
3. Check the weight of unfamiliar loads if within 10% of the load chart capacity.
4. Attach the load properly to the hook with slings or chains and balance the load.
5. Do not wrap the hoist rope around the load.
6. Before hoisting, check the wire rope for kinking or twisting.
7. Bring the hook over loads in such a manner as to prevent swing.
8. If there is a slack rope condition, it should be determined that the rope is properly seated on the drum and in the sheaves.
9. Move loads smoothly, without sudden acceleration or deceleration.
10. Do not allow personnel to ride the load or hook.
11. Avoid carrying loads over people.
12. Test the brakes each time a load approaching the rated load is handled.
13. Do not leave the crane unattended while a load is suspended.
14. The operator should respond to signals only from the appointed signal man, but should obey a stop signal at any time no matter who gives it.
15. Never allow fewer than three full wraps of wire rope on any drum.
16. Do not refuel crane with engine running.
17. A carbon dioxide, dry chemical, or equivalent fire extinguisher must be kept in the operator's cab or vicinity of the crane.

## INSPECTION

A sample inspection check list has been provided in order to acquaint an operator with the proper inspection of NATIONAL pedestal cranes. The inspection procedure has been divided into three general groups based upon intervals at which inspection should be performed. The three inspection intervals are: daily, weekly, and monthly. These intervals are recommended for normal operation, but may be adjusted to the customer's operating conditions.

If adjustments or repairs are found to be necessary from an inspection, the inspector should promptly notify the proper personnel to assure problem correction. The crane operator of the next shift should also be notified of the defect if the problem has not been corrected prior to the shift change.

Inspection records should be signed and dated by the inspector, and kept available for future reference as recommended by the American Petroleum Institute.

## INSPECTION CHECK LIST — DAILY

CRANE SERIAL NUMBER_____ DATE INSPECTED_____

NO. OF CRANE OPERATING HOURS_____ INSPECTED BY_____

| DAILY PROCEDURE | CONDITION | | COMMENTS |
|---|---|---|---|
| | O.K. | *Correction Required | |
| 1. CHECK FOR AND ELIMINATE SPILLAGE OF FLAMMABLE MATERIALS SUCH AS FUEL & OIL. | | | |
| 2. Service engine, checking water and oil levels, and air cleaner. | | | |
| 3. Check engine fuel tank level. | | | |
| 4. Check hydraulic oil tank level. | | | |
| 5. Lubricate boom foot bushings. | | | |
| 6. Check operation of horn. | | | |
| 7. Start engine and allow to warm up at idle speed. Check engine gages. | | | |
| 8. Check clutch operation. | | | |
| 9. Engage clutch and allow hydraulic oil to warm up at idle speed. | | | |
| 10. Observe charge pressures to see if they are in proper operating range, 160/300 psi (11/20.7 bar). | | | |
| 11. Observe control pressure to see if it is in the proper operating range, 700/750 psi (48.3/51.7 bar). | | | |
| 12. Observe the triple pump drive lube oil gage to see if it is in the proper operating range, 20/60 psi (1.4/4.1 bar) at 1800 RPM. | | | |
| 13. Check swing, boom, and hoist control handles for adjustment and for proper centering when released. | | | |
| 14. Check air regulator to see if it is in the proper operating range, 95/100 psi (6.6/6.9 bar). | | | |
| 15. Drain moisture from air receivers. | | | |
| 16. Check all "brake-off" indicators. | | | |
| 17. Operate emergency brake set to assure its operation. | | | |
| 18. Visually inspect all running wire rope and check all drums for proper spooling. | | | |
| 19. Check for leakage or deterioration of components in hydraulic and pneumatic systems. | | | |
| 20. Observe condition of pump suction line filter at engine speed of 1800 RPM. | | | |
| 21. Check boom pins and gantry leg pins for missing or dislocated cotter pins. | | | |
| 22. Check condition of high pressure in-line filters by depressing red button on filter while powering down at full speed. If button pops out, replace element. | | | |

*When a checkmark has been placed under the "correction required column for a certain procedure, corrective work must be performed. After correction of the defect, the date and initials of the person making the correction are to be placed in the o.k. column of the procedure in question.

## INSPECTION CHECK LIST — WEEKLY AND MONTHLY

CRANE SERIAL NUMBER _____ DATE INSPECTED _____

NO. OF CRANE OPERATING HOURS _____ INSPECTED BY _____

| WEEKLY PROCEDURE | CONDITION O.K. | CONDITION *Correction Required | COMMENTS |
|---|---|---|---|
| 1. Lubricate crane per instructions in operator's manual. | | | |
| 2. Check oil levels of all shaft assemblies, swing gear housings, and the triple pump drive. | | | |
| 3. Check line travel limiter system for proper operation. | | | |
| 4. Check boom angle limiter system for proper adjustment (adjustment must be set to prohibit boom angles greater than 80° and lower than 0°). | | | |
| 5. Check boom hoist lock pawl for correct engagement and disengagement with ratchet wheel teeth. | | | |
| 6. Check brakes for adjustment and excessive wear of lining, loose or missing components and contamination by lubricants. | | | |
| 7. Check electrical apparatus such as lights and switches for malfunction or signs of deterioration. | | | |
| 8. Check air line lubricator oil levels. | | | |
| 9. Check clutch adjustment. | | | |

| MONTHLY PROCEDURE | CONDITION O.K. | CONDITION *Correction Required | COMMENTS |
|---|---|---|---|
| 1. Thoroughly inspect all wire rope and pendant lines for deterioration such as: reduction of rope dia.; broken and worn outside wires; corroded and cracked end connections and severe kinking, crushing and unstranding of wires. | | | |
| 2. Check hooks for cracks, deformation and damage to safety latches. | | | |
| 3. Inspect boom for deformed, cracked, corroded or missing members. | | | |
| 4. Inspect gantry for deformed, cracked, corroded or missing members. | | | |
| 5. Inspect main frame for deformed, cracked, or corroded members. | | | |
| 6. Check for loose bolts on hydraulic pumps and motors, swing bearing, gantry, swing gear reducers, and shaft assemblies. | | | |
| 7. Inspect sheaves for cracks, excessive wear, and they they operate freely. | | | |
| 8. Inspect all load, angle and weight indicating systems over their full range for significant inaccuracies. | | | |
| 9. Check for work, cracked, distorted, or dislocated boom pins, wire rope rollers, and swing bearing gear teeth. | | | |

*When a checkmark has been placed under the "correction required" column for a certain procedure, corrective work must be performed. After correction of the defect, the date and initials of the persons making the correction are to be placed in the o.k. column of the procedure in question.

OPERATOR'S CAB

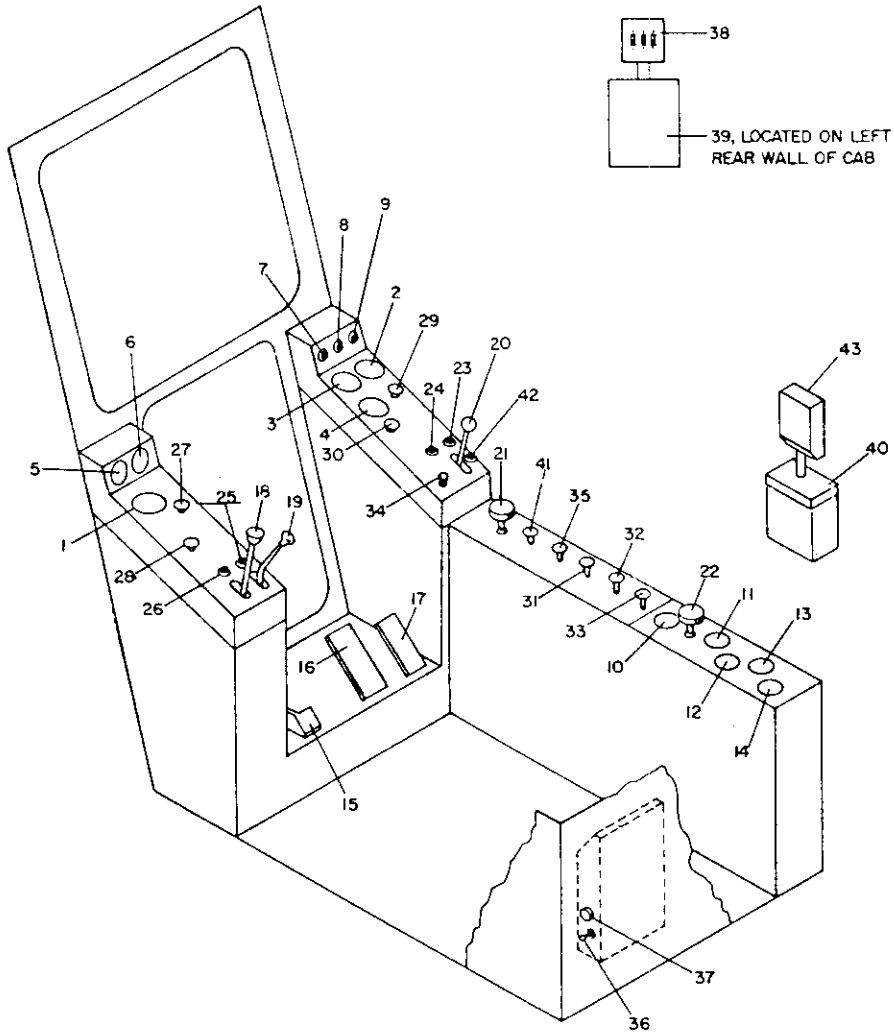


Figure 1

LT-160319

1. Engine Tachometer
2. Boom Hoist Pressure Gage
3. Swing Pressure Gage
4. Main Hoist Pressure Gage
5. Engine Water Temperature Gage
6. Engine Oil Pressure Gage
7. Triple Pump Drive Low Lube Pressure Indicator
8. Low Hydraulic Tank Fluid Level Indicator
9. Air Supply Low Pressure Indicator
10. Control Air Pressure Gage
11. Control Pressure Gage
12. Swing Charge Pressure Gage
13. Boom Charge Pressure Gage
14. Main/Whip Charge Pressure Gage
15. Boom Hoist Control Pedal
16. Foot Brake Pedal
17. Foot Throttle Pedal
18. Swing Control Handle
19. Boom Hoist Control Handle
20. Main/Whip Hoist Control Handle
21. Hand Throttle Control
22. Control Air Pressure Regulator
23. Whip Hoist "Brake Off" Indicator
24. Main Hoist "Brake Off" Indicator
25. Boom Hoist "Brake Off" Indicator
26. Swing "Brake Off" Indicator
27. Emergency Brake Set Valve
28. Swing Brake Control Valve
29. Emergency Load Release Valve
30. Main/Whip Hoist Selector Control Valve
31. Engine Start Valve
32. Engine Kill Valve
33. Low Boom Limit Override Valve
34. Horn Valve
35. Clutch Control Valve
36. Cab Heater Power Switch
37. Cab Heater Thermostat Switch
38. Boom, Beacon and Frame Light Switches
39. Electrical Circuit Breaker Cabinet
40. Electrical Component Box
41. Main and Whip Hoist (Hook) High Speed Selector Valve
42. Main and Whip Hoist High Speed Indicator
43. Gage Transformer

## LUBRICANTS AND FLUIDS

### HYDRAULIC FLUID*

CAUTION: When adding to or changing the hydraulic fluid every precaution must be taken to prevent any contamination of the hydraulic fluid. Do not mix different types of hydraulic fluids.

The following fluids are recommended:

First Choice — Automatic Transmission Fluid, Type "F"
Second Choice — Automatic Transmission Fluid, "Dexron"
Third Choice — Hydraulic Oil, Premium Grade with Anti-Wear Additive, 48-55 SSU at 210°F (6.8-8.9 cSt at 100°C), Minimum Viscosity Index of 170.

Tank Capacity — 60 U.S. Gallons (227 Litres)

### HOIST WINCHES (SHAFT ASSEMBLIES) AND SWING GEAR REDUCERS*

LUBRICANT: Use an industrial extreme pressure gear oil. The following charts give the recommended grades for various temperatures surrounding the gear housings.

U.S. UNITS OF MEASURE

| TEMPERATURE | AGMA INDUSTRIAL EP GEAR OIL |
|---|---|
| 40°F to 140°F | AGMA #5 EP or ASTM/ISO-VG Grade 220 (Viscosity: 1047-1283 SSU at 100°F) |
| -20°F to 60°F | AGMA #2 EP or ASTM/ISO-VG Grade 68 (Viscosity: 317-389 SSU at 100°F) |

METRIC UNITS OF MEASURE

| TEMPERATURE | AGMA INDUSTRIAL EP GEAR OIL |
|---|---|
| 4.4°C to 60°C | AGMA #5 EP or ASTM/ISO-VG Grade 220 (Viscosity: 198-242 cSt at 40°C) |
| -29°C to 16°C | AGMA #2 EP or ASTM/ISO-VG Grade 68 (Viscosity: 61.2-74.8 cSt at 40°C) |

CAPACITIES: Boom Hoist Winch — 11 U.S. Quarts (10.4 Litres)
Main and Whip Hoist Winches — 24 U.S. Quarts (22.7 Litres)
Swing Gear Reducers — 24 U.S. Quarts (22.7 Litres), each

### TRIPLE PUMP DRIVE*

LUBRICANT: The following charts give the recommended lubricants for various temperatures surrounding the pump drive.

U.S. UNITS OF MEASURE

| TEMPERATURE | LUBRICANT |
|---|---|
| 50°F to 125°F | AGMA #3 EP or ASTM/ISO-VG Grade 100 (Viscosity: 468-575 SSU at 100°F) |
| 15°F to 60°F | AGMA #2 EP or ASTM/ISO-VG Grade 68 (Viscosity: 317-389 SSU at 100°F) |
| -20°F to 25°F | SAE 10W/40 Motor Oil with Foam Suppressant, Rust and Oxidation Inhibitors. |

METRIC UNITS OF MEASURE

| TEMPERATURE | LUBRICANT |
|---|---|
| 10°C to 50°C | AGMA #3 EP or ASTM/ISO-VG Grade 100 (Viscosity: 90-110 cSt at 40°C) |
| -9°C to 16°C | AGMA #2 EP or ASTM/ISO-VG Grade 68 (Viscosity: 61.2-74.8 cSt at 40°C) |
| -29°C to -4°C | SAE 10W/40 Motor Oil with Foam Suppressant, Rust and Oxidation Inhibitors. |

CAPACITY: 36 U.S. Quarts (34 Litres)

*NOTE: Fluids and lubricants must pour freely at minimum operating temperature. Change lubricants and fluids every six months or as frequently as operating conditions require to maintain a clean, sludge-free oil of proper viscosity.

## AIR LINE LUBRICATORS

The hydraulic fluid, as used in the crane's hydraulic system, is recommended to be used in these lubricators. Do not overfill.

## BRAKE CYLINDER LUBRICANT RESERVOIRS

The hydraulic fluid, as used in the crane's hydraulic system, is recommended to be used in these reservoirs. The reservoirs should be filled only 3/4 full.

## GREASE FITTINGS

Figure 2 shows the grease fittings on the OS-435 pedestal crane. The following fittings should be lubricated daily:

A. Boom foot (2 fittings in frame wall beside the hydraulic tank)

The following fittings should be lubricated weekly:

B. Swing Bearings and swing pinions (8 fittings in frame wall beside the hydraulic tank)

C. Air throttle actuator (2 fittings)

D. Radiator fan sheave bearing, roller sheave bearing, and turbocharger (where applicable)

E. Triple pump drive clutch (3 fittings)

F. Lock pawl pin (1 fitting)

G. Gantry sheaves (5 fittings)

H. Floating block sheaves (5 fittings)

J. Turn sheaves (6 fittings)

K. Main load sheaves (5 fittings)

L. Sheave extension sheave (1 fitting)

M. Load block (sheaves and swivel)

N. Overhaul ball (swivel)

The following bearings should be inspected monthly and lubricated as required:

Main, whip and boom hoist brake linkage bearings.

The recommeded greases are:

Warm Weather — Number 2 EP Lithium Base Grease

Cold Weather — Number 1 EP Lithium Base Grease

## SWING GEAR AND PINION TEETH

The teeth should be kept coated with Jet Lube, Inc., "Kopr-Kote" compound or an equivalent lubricant.

LUBRICATION POINTS

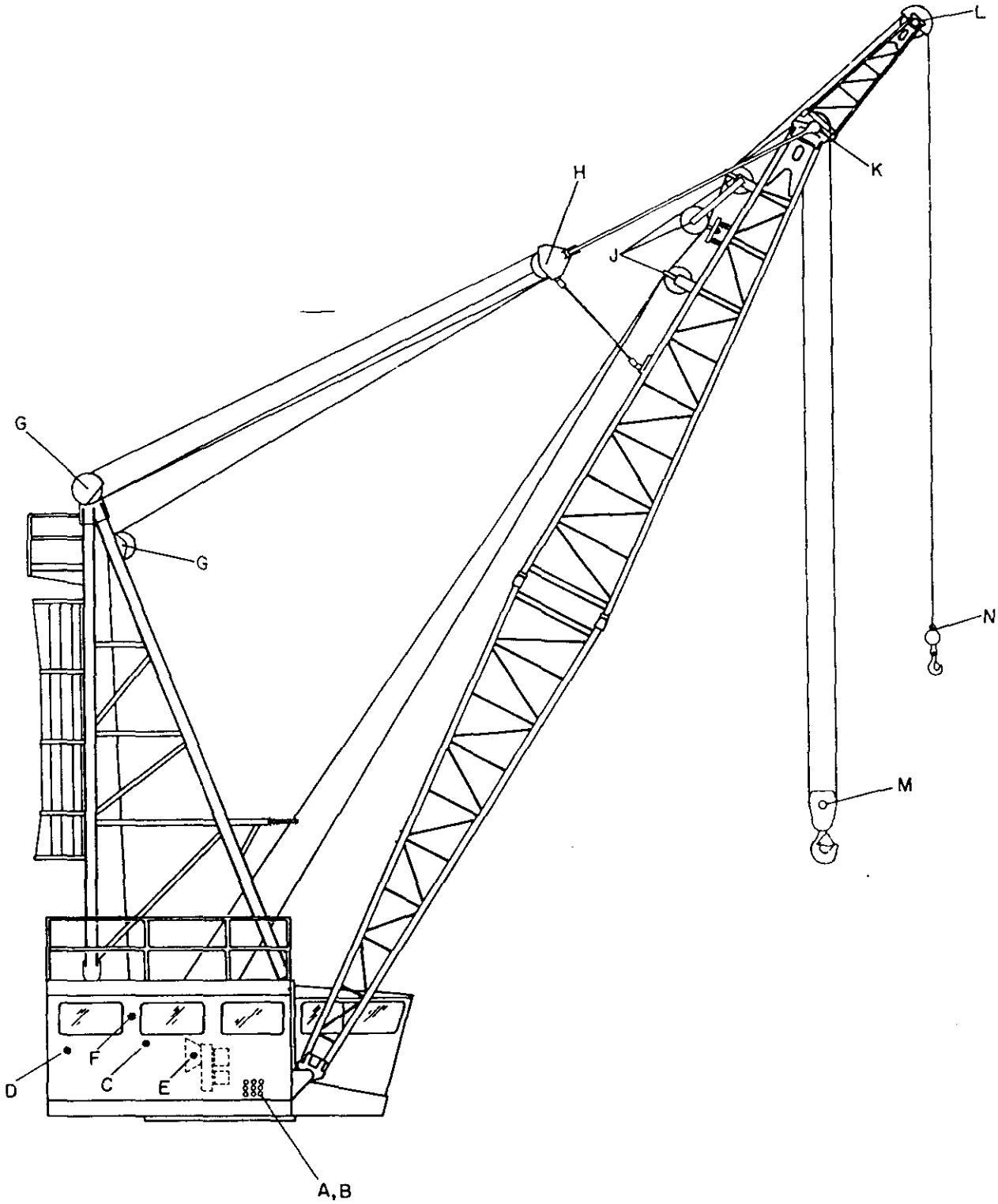


Figure 2

LT-160001

## FILTERS AND CONDITIONERS

Clean fluid is essential for the reliable operation of the crane's hydraulic system. Therefore, filters have been installed in the system to eliminate contaminants and increase the life of the hydraulic system components.

SUCTION LINE FILTER - CHANGE EVERY 2 MONTHS OR 200 HOURS

The suction line filter (Figure 3) is located beneath the hydraulic fluid tank and contains two throw-away elements separated by an adapter which must be retained when the elements are replaced. The elements in the suction line filter should be changed every two months or every 200 hours, whichever occurs first. There is also an indicator in the filter head that can be used for daily checking of the condition of the filter elements. If this indicator reads, "NEEDS CLEANING" when the hydraulic oil is warm and the engine is at full RPM, the filter elements should be changed immediately.

NOTE: The recommended element change interval should be followed even if the indicator reads "CLEAN" after 200 hours or two months of element usage.

To replace filter elements, first close the tank to filter valve, and drain the filter housing by removing the magnetic plug located under the filter. Then remove the filter head, elements, and assembling rod. Clean the magnetic plug and assembling rod magnetics and then reinstall. Insert new elements being sure that the adaptor has been inserted between them. Carefully replace the filter head, taking precautions to properly seal the filter cover "O"-ring in its groove.

IMPORTANT - OPEN TANK TO FILTER VALVE BEFORE STARTING CRANE ENGINE.

SUCTION LINE FILTER

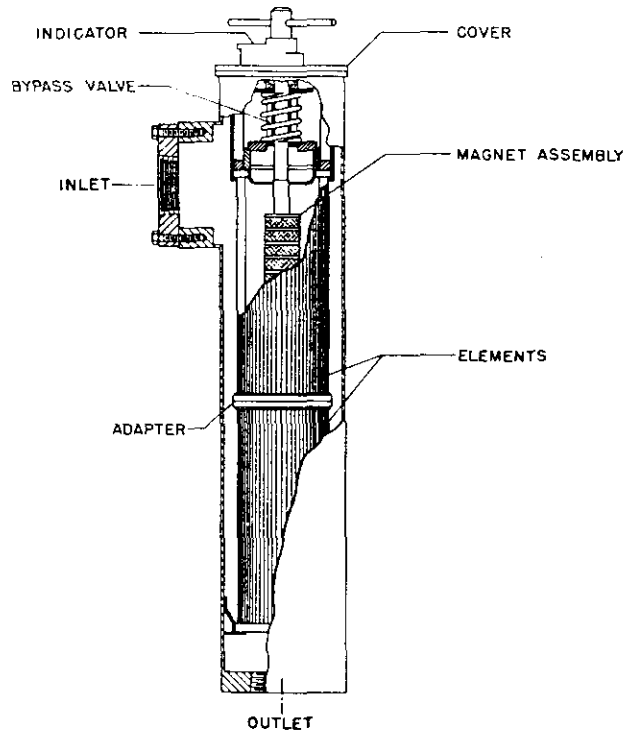


Figure 3

LT-160002

HIGH PRESSURE IN-LINE FILTERS - CHANGE ELEMENTS EVERY 2 MONTHS OR 200 HOURS

The main/whip, boom and swing high pressure hydraulic circuits are equipped with high pressure filters designed for reversible flow operation. These filters (Fig. 4) each contain a single element which should be changed every two months or every 200 hours of operation, whichever occurs first. The main/whip circuit filter is installed in the high pressure tubing line forward of the main/whip pump. The boom circuit filter is installed in the high pressure tubing on the left side of the boom motor. The swing circuit filter is installed above the swing pump.

A "Pop-out" type indicator is installed in each filter head for periodic checking of the element. In order to check the element's condition, the hydraulic oil must first be warmed up and the red indicator button reset by pushing the button. Next the cab control lever associated with the filter to be checked should be pushed forward completely with the engine at full RPM. This action will cause a full flow of oil through the filter. If the red button pops out during this operation, the filter should be changed immediately.

To change an element of a high pressure in-line filter, first unscrew the bowl of the filter with a wrench attached to the 1-1/8" hex boss attached to the bottom of the filter bowl. Carefully lower the bowl away from the filter head assembly and gently pry the element loose from its mounting. Push a new element into the filter head and then screw the bowl back into place being careful not to damage the sealing "O" ring or back-up rings in the filter head.

NOTE: Be certain the bowl is properly tightened when reinstalled in filter head.

IN-LINE FILTER

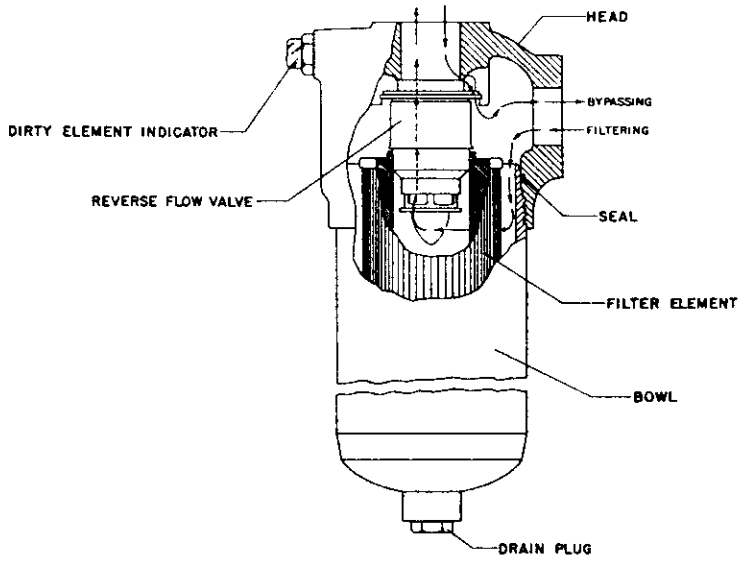


Figure 4 LT-160003

PUMP DRIVE HOUSING LUBE OIL FILTER

An oil filter is located in the suction line of the pump drive housing's lube oil pump (Fig. 5). This filter is mounted to the side of the triple pump drive housing. The wire cloth element in the filter should be cleaned every two months.

To clean the wire cloth element, disconnect the hose from the top of the filter housing and then remove the four 1/4" screws that hold the bowl to the filter head. Lift the head away from the filter bowl, and then unscrew the element from the filter head. Clean the wire cloth element, magnets and bowl, and reassemble.

LUBE OIL FILTER

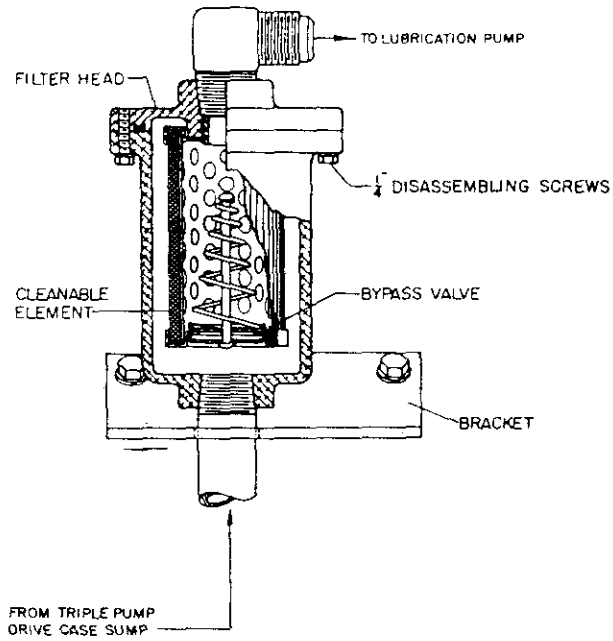


Figure 5 LT-160004

CONTROL PRESSURE SYSTEM FILTER - CHANGE ELEMENT EVERY 2 MONTHS OR 200 HOURS.

The control pressure system is provided with a separate filter to isolate it from contamination generated by the hoist and swing hydraulic systems. The filter is mounted on the inboard side of the triple pump drive in the suction line of the control pressure pump.

The filter (Fig. 6) utilizes a disposable cartridge type element. To change filter elements, the used element is unscrewed from the filter head and the new element is installed in its place. The element should be hand tightened, only.

HYDRAULIC TANK FILL FILTER

Fluid is added to the hydraulic tank by means of a hand pump. This pump and the fluid fill filter are located on the hydraulic tank. This single element filter is provided between the hand pump and the hydraulic tank to filter all fluid being added to the hydraulic tank. This filter element should be changed whenever the crane's hydraulic fluid is changed. Directions for changing the element are included in each new element box.

CONTROL PRESSURE SYSTEM FILTER

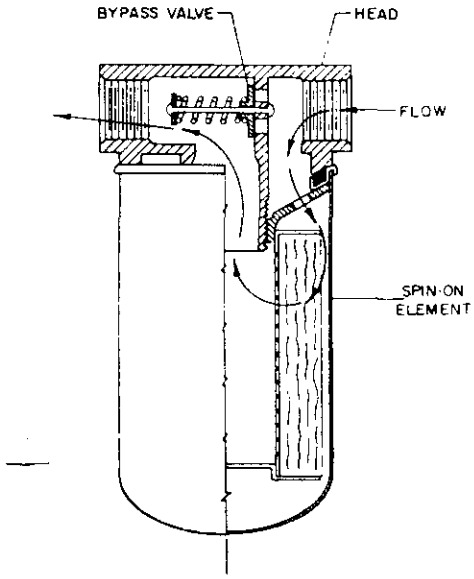


Figure 6

LT-160043

AIR DRYER-PURIFIER

All crane control air is dried and filtered prior to being used. The compressed air dryer-purifier (Figure 7) is located on the outside of the rear wall of the operator's cab. This is a desiccant type dryer and should be serviced every six months.

To service the dryer, follow these steps:

1. Cut off air supply to the dryer-purifier and drain the air pressure from the small air receiver.
2. Remove the top retaining nut using a 13/16" end wrench and remove the cap and bypass spring.
3. Using the bail, remove the canister from the housing. It may be necessary to loosen the canister from the housing by using a twisting back and forth motion while pulling upwards.
4. Lightly lubricate all the O-rings.
5. Using a rotating motion to properly seat the O-ring below the housing shoulder, install the replacement canister.
6. Replace the cap and bypass spring and secure with the retaining nut.
7. Restore the air supply to the dryer-purifier.

NOTE: Replacement desiccant canisters should be stored in a dry place.

AIR DRYER-PURIFIER

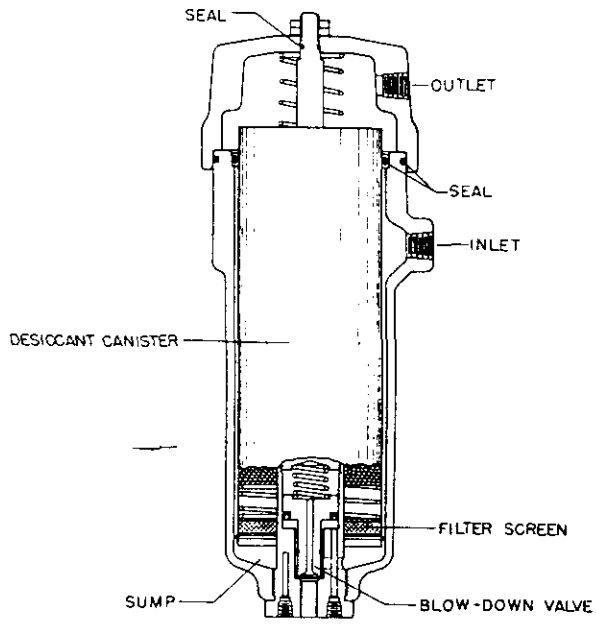


Figure 7 LT-160005

AIR LINE LUBRICATOR (CAB CONTROLS)

The air line lubricator (Figure 8) is a dynamic device. Oil is delivered into the compressed air line only when air is flowing through the lubricator. The lubricator is mounted on the small air receiver on the rear wall of the operator's cab.

An oil feed adjusting screw is provided on the top of the lubricator. Rotating the oil feed adjusting screw clockwise reduces the drip rate, counterclockwise increases the drip rate. Once the setting is established the lubricator will automatically adjust the drip rate with changes in flow. The drip rate should be adequate to provide a light film of lubrication for the seals and bearings of the air valves.

The drip rate is adjusted by first establishing a moderate air flow through the regulator. Next pull the red lock ring up and turn the adjustment screw to the desired drip rate. Finally push the red lock ring back into place. The rate of air lubrication should be observed for several days and adjusted further as may be required.

NOTE: DO NOT OVERFILL LUBRICATOR RESERVOIR.

AIR LINE LUBRICATOR

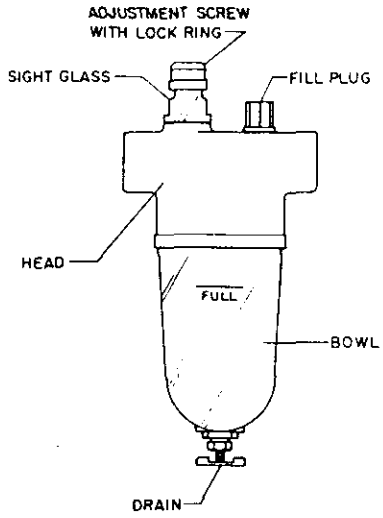


Figure 8

LT-160006

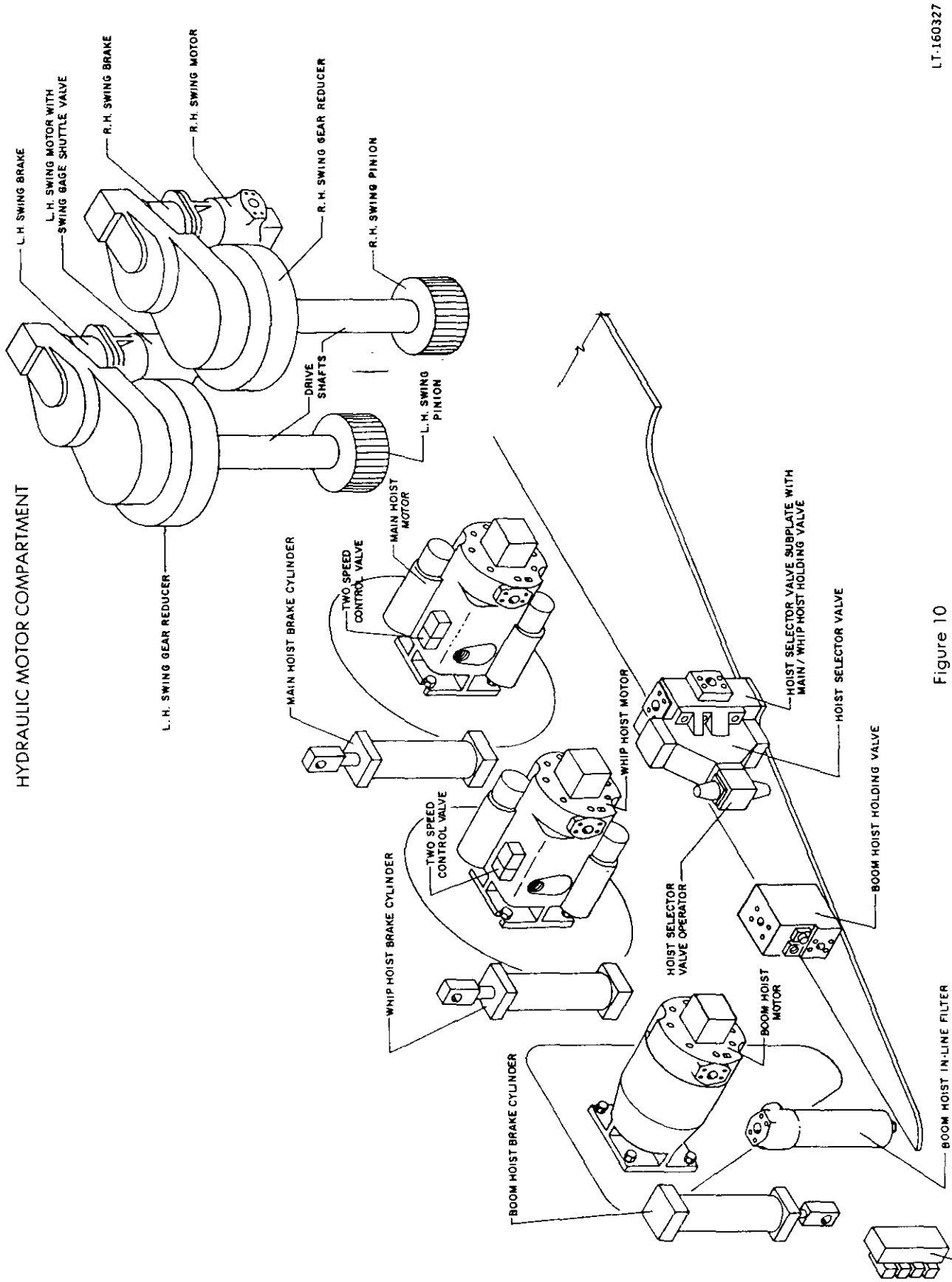


Figure 10



ARMCO National Supply Company
Division of Armco Inc

LT-160328

ENGINE COMPARTMENT

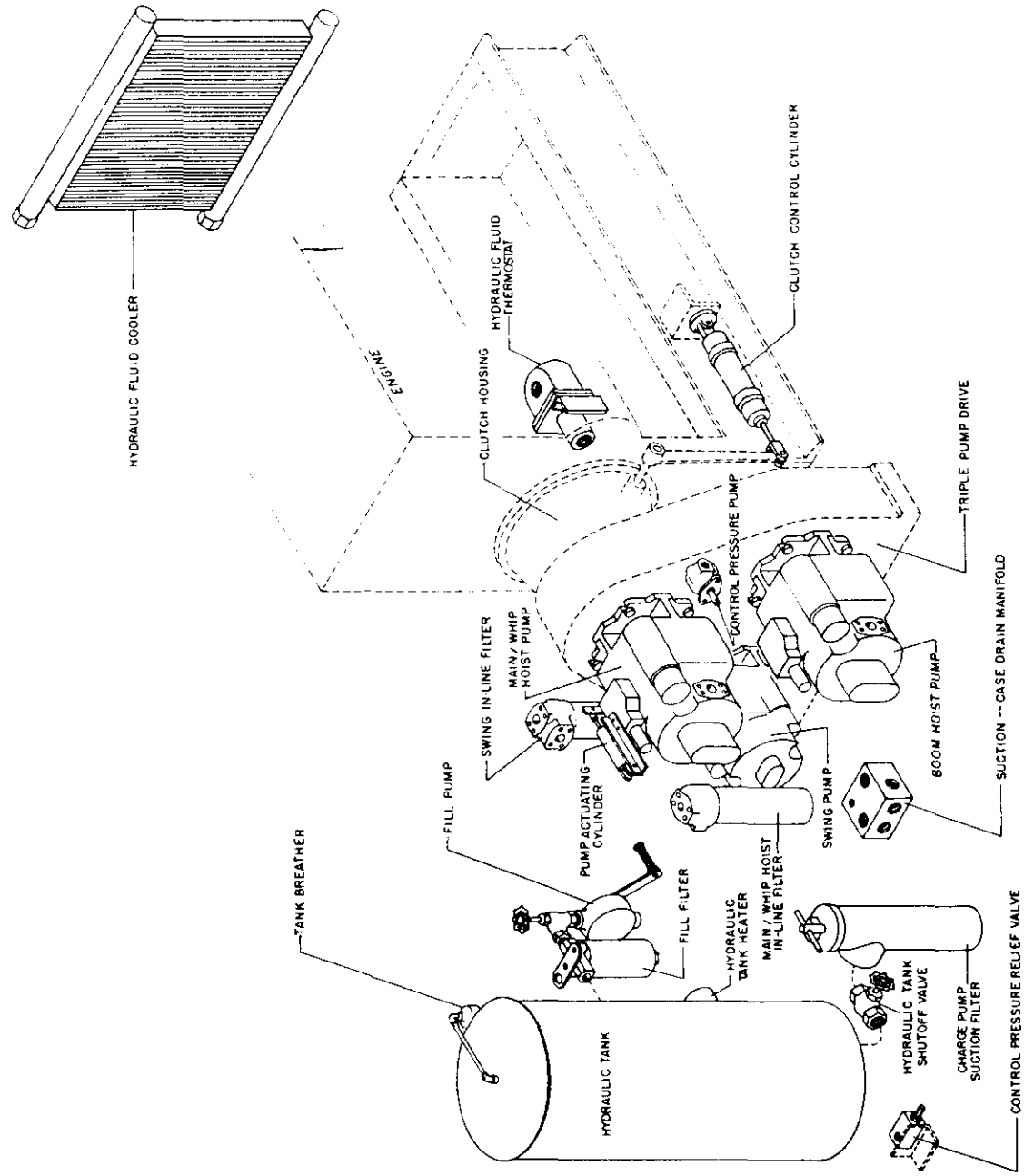


Figure 11

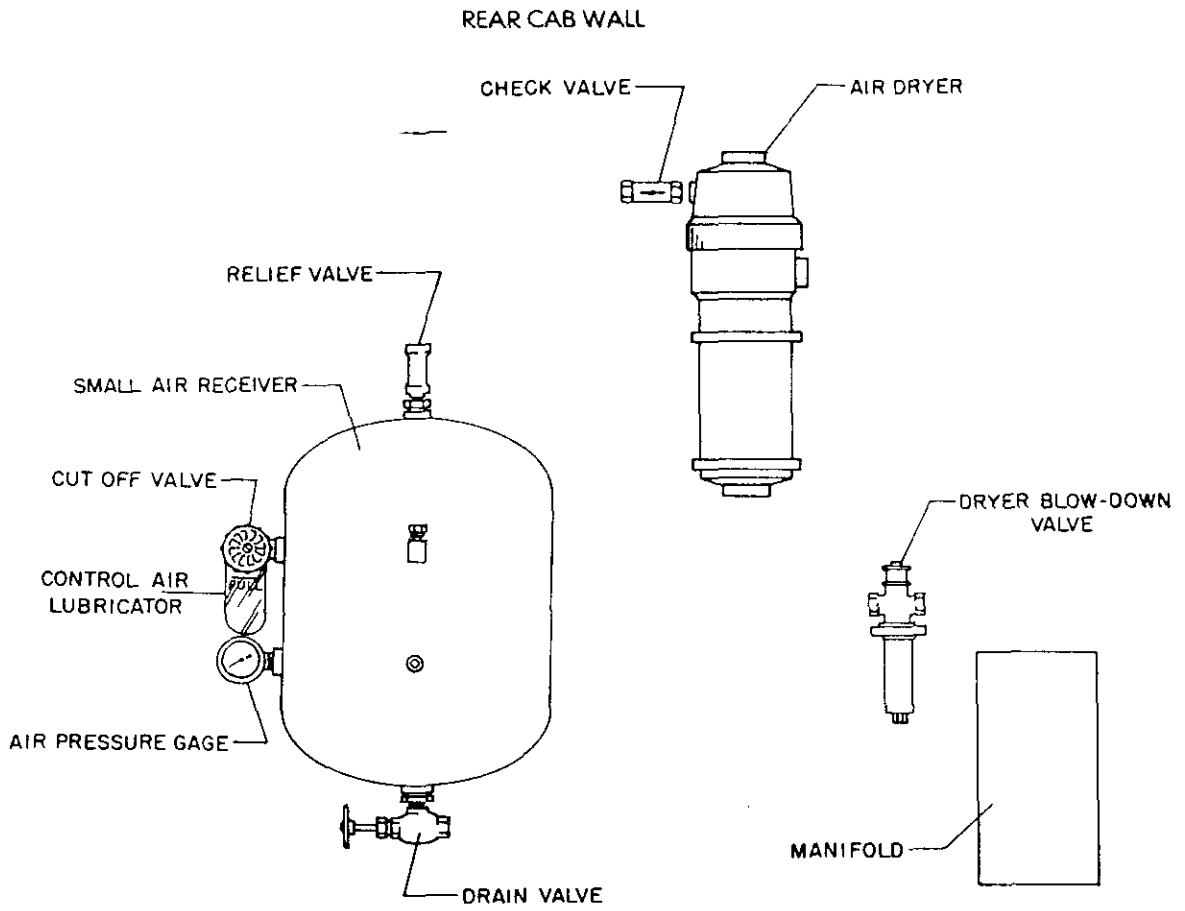


Figure 12

LT-160010

TRIPLE PUMP DRIVE

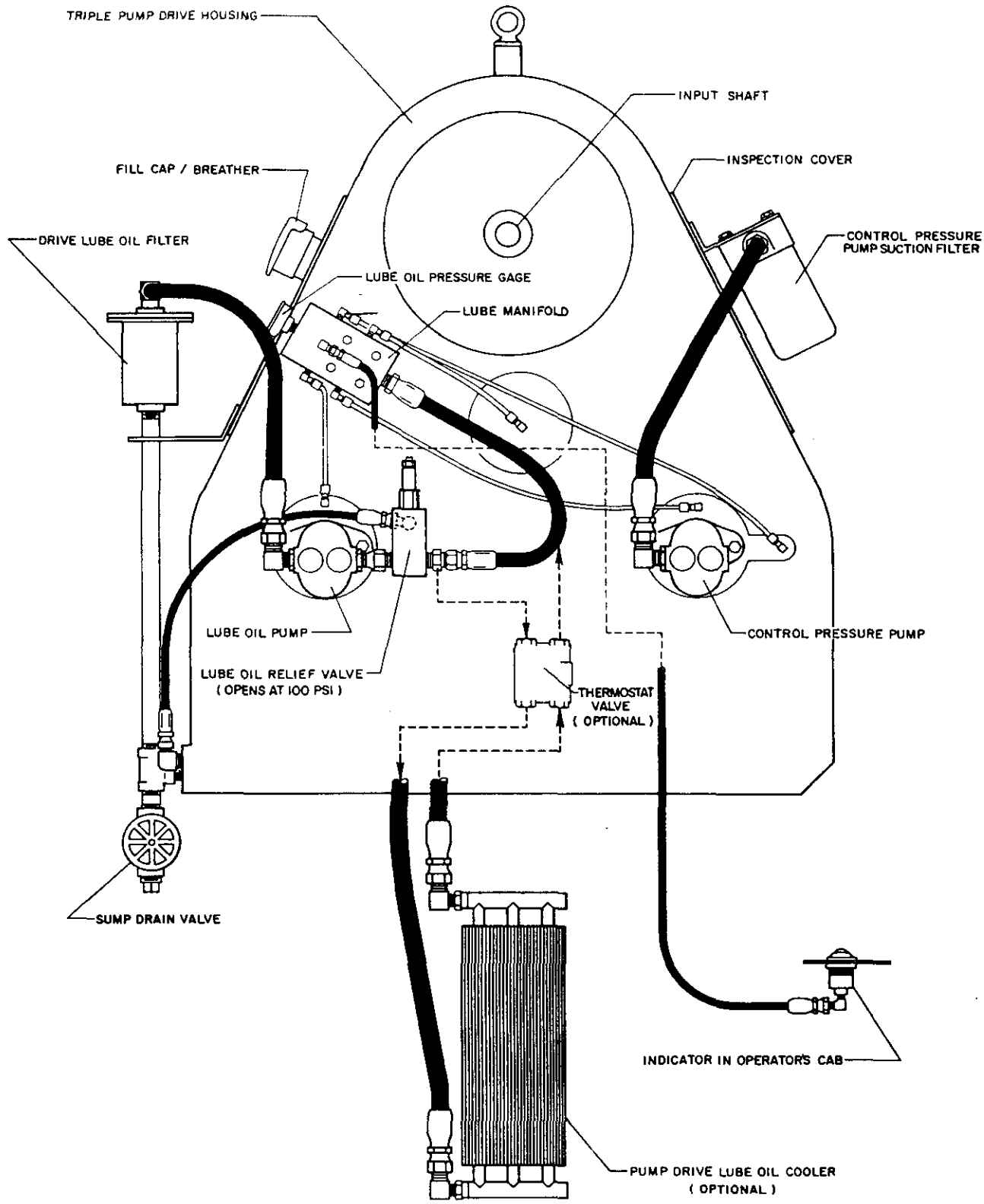


Figure 13

LT-160330

FIXED MOTOR AND VARIABLE PUMP

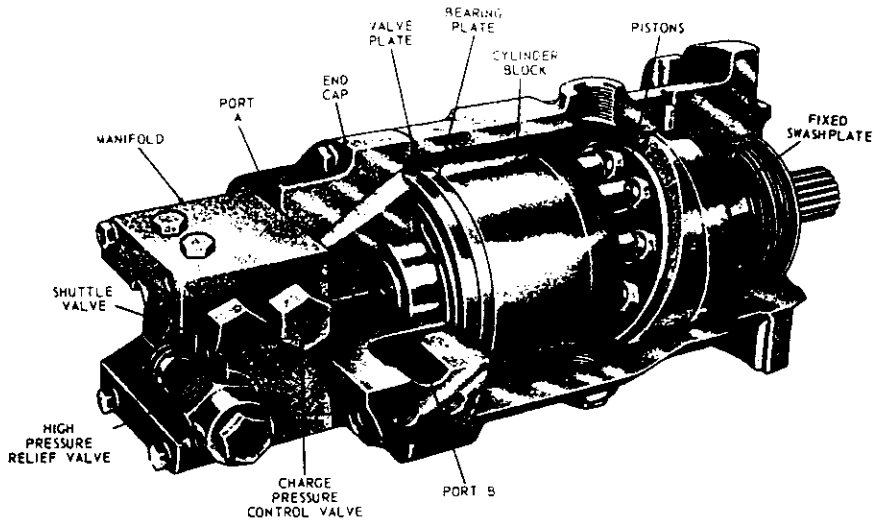


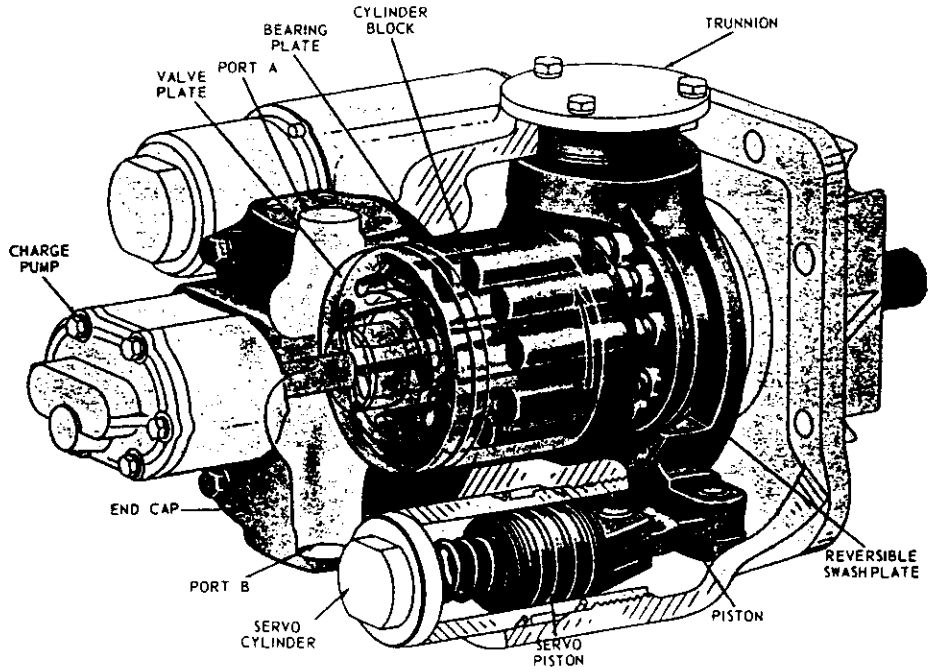


Figure 14

LT-160012



ARMCO National Supply Company
Division of Armco Inc

## HYDROSTATIC DRIVE

With the exception of the charge pressure, lubrication and control pressure pumps, all pumps and motors are of the axial piston type. These are incorporated for their high efficiency, long life and trouble free service.

Each system (main hoist, whip line hoist, boom hoist and swing) is a closed loop hydrostatic drive.

The hydrostatic drive offers infinite control of speed. The operator has complete control of the system with one lever for starting, stopping, load hoisting, or load lowering. The dynamic braking capabilities inherent with the closed loop hydrostatic drive provide normal braking requirements.

Control of the variable displacement, axial piston pump is the key to controlling the hoist or swing functions. Engine horsepower is transmitted to the pump. When the operator moves the control lever, the swashplate in the pump is tilted from neutral (camming the pump). The position of the control lever will determine the angle of the swashplate and, therefore, the volume of oil delivered by the pump. The control lever is stepless; therefore, the speed of the hoist or swing is infinitely variable from zero to maximum.

The variable displacement, reversing swashplate pump is controlled by a servo system. The pump control lever can be moved to some predetermined position with the servo system moving the swashplate of the pump to this predetermined point. The use of a servo system on the variable pump controls permits a minimum force requirement to move the pump control handle.

When the variable pump swashplate is tilted, a positive stroke of the pistons is created. This, in turn, at a given input speed, produces a certain flow of oil from the pump. This flow is transferred through high pressure lines to the motor. The ratio of the volume of flow from the pump to the volume displacement of the motor will determine the speed of the motor output shaft. Moving the control lever to the opposite side of neutral, the direction of flow from the pump is reversed and the motor output shaft turns in the opposite direction. Speed of the motor output shaft is controlled by adjusting the volume displacement (flow) of the pump. Working pressure is determined by the load and this establishes the demand on the system.

The crane's hydrostatic drive system consists of: pumps, motors, high pressure lines, low pressure drain lines, selector valve, holding valves, miscellaneous valves and pump manifold block.

## HYDRAULIC SCHEMATIC

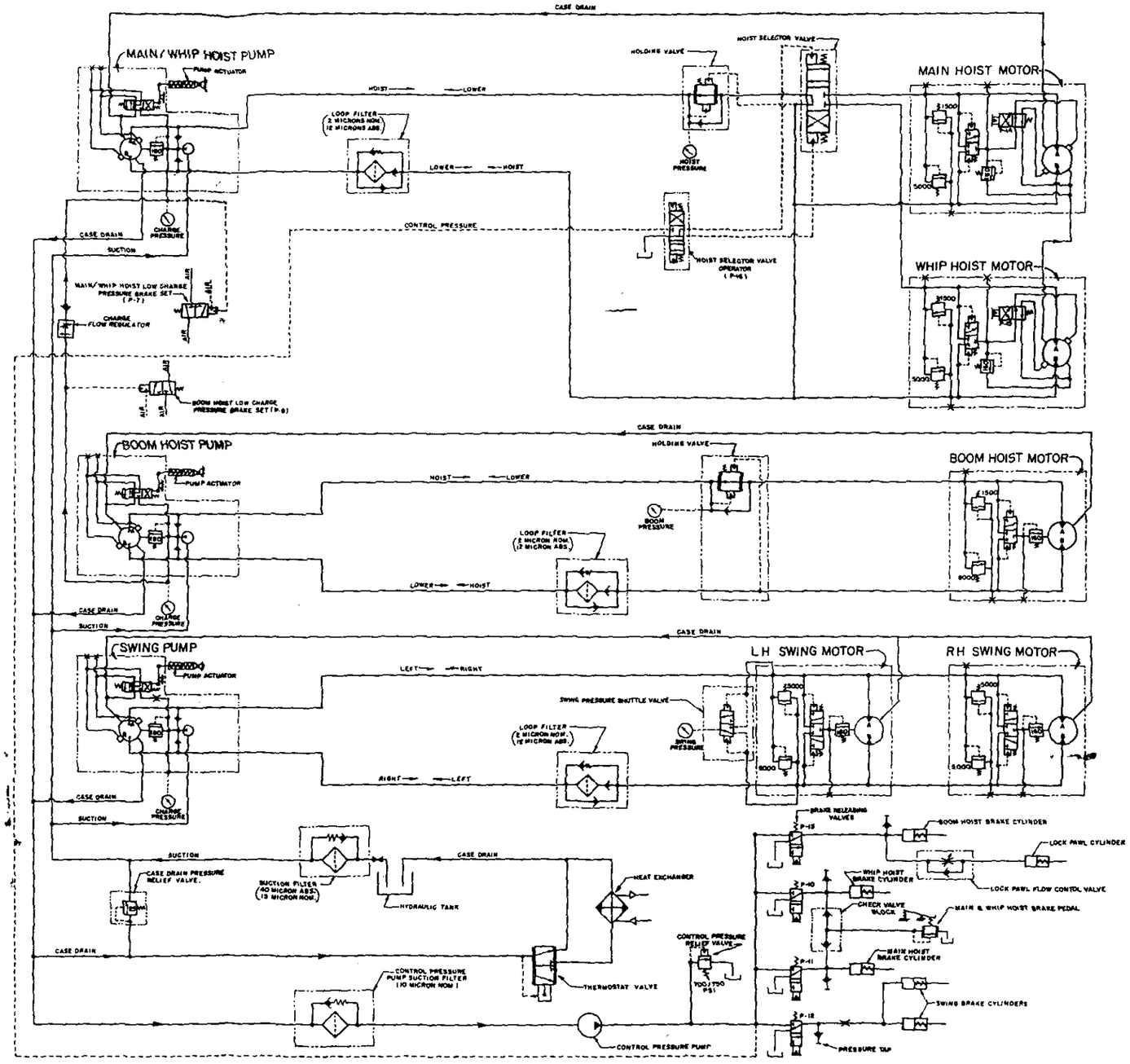


Figure 22

LT-160331

## AIR CONTROL SYSTEM

All control of the OS-435, hoisting, lowering and swinging, is accomplished using air control devices. With pressure regulating valves, manually operated valves, piston operated valves, diaphragm operated valves, shuttle valves and positioning cylinders, control of the hydrostatic drives is accomplished.

The controls were designed to meet the following requirements:

1. All brakes must set with the absolute loss of air pressure.
2. All hoist brakes must set and pump return to neutral with the loss of charge pressure.
3. The main and whip hoist brakes must set when the control handle is returned to neutral.
4. The boom hoist brake must set and the lock pawl must engage when the boom hoist control handle is returned to neutral.
5. The emergency brake set valve must apply all hoist brakes and the boom hoist lock pawl when depressed. The emergency brake set valve must also prevent the use of the hoist functions.
6. The emergency load release valve must release the main or whip brake (as determined by the position of the hoist selector control valve) and permit the load to "freefall" when depressed.

The air control system consists of the following:

### AIR COMPRESSOR (WHERE APPLICABLE)

Mounted to the engine is an air compressor. This compressor will supply an adequate air supply to operate the controls of the crane. The discharge pressure of the compressor should be regulated to a maximum of 110 psi (7.6 bar) and a minimum of 100 psi (6.9 bar).

### AIR COMPRESSOR UNLOADER (WHERE APPLICABLE)

The air compressor unloader regulates the discharge pressure and pressure differential of the air compressor. This valve is located near the rear of the crane beneath the engine and above the large air receiver. The unloader should be set to regulate the compressor discharge within the range of 100 to 110 psi (6.9 to 7.6 bar).

This valve serves to control the unloading mechanism which lifts the intake valves of the air compressor. The valve senses the air pressure in the large air receiver. When the pressure reaches 110 psi (7.6 bar), the valve directs air pressure to the unloading mechanism in the compressor. When the pressure in the receiver drops to 95 psi (6.6 bar), the valve shifts and permits the air pressure to the unloading mechanism to be exhausted. Without pressure to the unloading mechanism the compressor beings increasing the receiver air pressure.

### UNLOADER VALVE ADJUSTMENT (Figure 27)

The unload pressure (maximum pressure) is adjusted by turning the pressure adjusting nut clockwise to increase the pressure and counterclockwise to decrease the pressure.

Changing the differential [difference between load (minimum pressure) and unload (maximum pressure) pressure] is accomplished by holding the lock nut closest to the body of the valve so it does not move, then turning the large nut next to it very slightly clockwise to increase the differential and counterclockwise to decrease the differential.

AIR SCHEMATIC

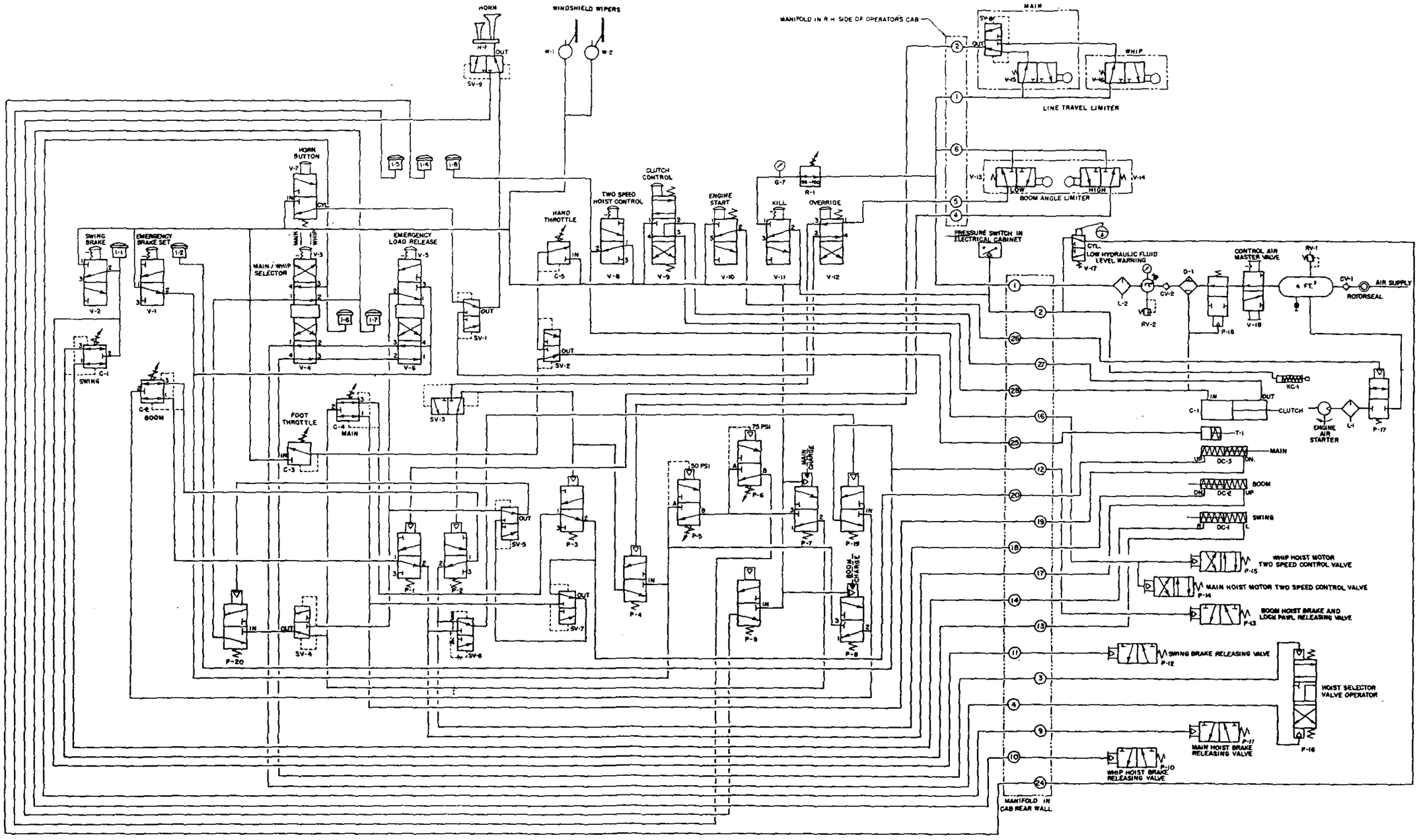


Figure 28

LT-160333

## OPERATION OF THE PRIMARY FUNCTIONS

MAIN LINE HOISTING A LOAD, LOWERING A LOAD AND POWERING DOWN

With the hoist selector control valve (Fig. 1, Item 30) pushed for "MAIN", the main hoist pneumatic system is made operable and the hoist selector valve operator (P-16) receives an air pressure signal, shifts and directs control pressure to shift the selector valve for operation of the main hoist. Control handle (Fig. 1, Item 20) movement, in either the hoist or lower direction, sends air pressure to the main hoist brake releasing valve (P-11) shifting the valve which directs control pressure into the main hoist brake cylinder. Pressure to the brake cylinder releases the brake. The movement of the control handle also directs air pressure to the "BRAKE OFF" indicator (I-6) which turns amber to indicate the main hoist brake has been signaled to release.

When the control handle is moved in the hoist direction the main/whip pump actuator (DC-3) receives air pressure on the piston end. The actuator then pushes the pump displacement control valve lever and causes the pump the "cam". When the pump cams high pressure (5000 psi [340 bar] max) fluid is pumped out of port "A" and through the tubing to the holding valve, through the hoist selector valve and then to port "A" of the main hoist motor. At port "A" the high pressure fluid shifts the shuttle valve in the motor valve manifold and then rotates the motor. The fluid leaves port "B" of the motor at charge pressure. Part of the fluid passes through the shuttle valve and charge pressure relief valve in the motor valve manifold and enters the motor case. Most of the fluid leaving the motor goes through the tubing to the tee in the hoist selector valve subplate, by-passes the in-line filter element and returns to port "B" of the main/whip pump. At pump port "B" the fluid from the motor mixes with fluid from the charge pump and then re-enters the main/whip pump.

When the control handle (Fig. 1, Item 20) is moved in the lower direction, with a load on the hook, the main/whip pumps actuator (DC-3) receives air pressure on the rod end. The actuator then pulls on the pump displacement control valve lever and causes the pump to "cam". When the pumps cams, fluid is discharged out of port "B" at charge pressure. As the fluid leaves the main/whip pump it mixes with fluid from the charge pump. The fluid now passes through the tubing and is filtered by the in-line filter. The filtered fluid now goes to the tee in the hoist selector valve subplate and then to port "B" of the main hoist motor. At port "B" part of the fluid passes through the shuttle valve and charge pressure relief valve in the motor valve manifold and enters the motor case. Most of the fluid enters the motor and is pressurized from charge pressure to high pressure (5000 psi [340 bar] max). (While lowering a load the motor is pressurizing the fluid. The load on the hook attempts to rotate the motor but the speed of the motor is limited by the amount of fluid passing through it. The pump serves to regulate the amount of fluid passing through the motor.) The high pressure fluid at motor port "A" shifts the shuttle valve and then passes through the tubing and hoist selector valve to the holding valve. At the holding valve the fluid must pass through the flow control valve before it continues on through the tubing to the main/whip pump "A" port. At pump port "A", the fluid re-enters the cylinder block and its pressure is dropped to charge pressure as it passes through the pump.

When the control handle (Fig. 1, Item 20) is moved in the lower direction, with no load on the hook, the main/whip pump actuator (DC-3) receives air pressure on the rod end. The actuator then pulls the pump displacement control valve lever and causes the pump to "cam". When the pump cams, high pressure (1500 psi [102 bar] max) fluid is pumped out of port "B" of the pump and passes through the tubing to the in-line filter. After filtration the fluid continues on through the tubing to port "B" of the main hoist motor. The high pressure fluid then passes through the main motor, causing it to rotate, and leaves port "A" of the motor at charge pressure. The fluid now passes through the tubing, hoist selector valve and holding valve re-entering the pump at port "A". During this operation the shuttle valve and charge pressure relief valve in the motor valve manifold do not have fluid passing through them and the only fluid entering the system from the charge pump is fluid replacing internal pump and motor leakage.

Returning the control handle to neutral exhausts the air pressure to the piston of the main hoist brake releasing valve (P-11) and the valve returns, exhausting the pressure in the brake cylinder. With the release of the pressure in the main hoist brake cylinder, the main hoist brake sets. At the same time, the air pressure to the pump actuating cylinder (DC-3) is exhausted and the main/whip pump returns to the neutral, no flow of fluid, position.

WHIP LINE HOISTING A LOAD LOWERING A LOAD AND POWERING DOWN

With the hoist selector control valve (Fig. 1, Item 30) pulled for "WHIP", the whip hoist pneumatic system is made operable and the hoist selector valve operator (P-16) receives an air pressure signal, shifts and directs control pressure to shift the selector valve for operation of the whip hoist. Control handle (Fig. 1, Item 20) movement in either the hoist or lower direction sends air pressure to the whip hoist brake releasing valve (P-10), shifting the valve which directs control pressure into the whip hoist brake cylinder. Pressure to the brake cylinder releases the brake. The movement of the control handle also directs air pressure to the "BRAKE OFF" indicator (I-7) which turns amber to indicate the hoist brake has been signaled to release.

When the control handle (Fig. 1, Item 20) is moved in the hoist direction the main/whip pump actuator (DC-3) receives air pressure on the piston end. The actuator then pushes the pump displacement control valve lever and causes the pump to "cam". When the pump cams, high pressure (5000 psi [340 bar] max) fluid is pumped out of port "A" and through the tubing to the holding valve, through the hoist selector valve and then to port "A" of the whip hoist motor. At port "A" the high pressure fluid shifts the shuttle valve in the motor valve manifold and then rotates the motor. The fluid leaves port "B" of the motor at charge pressure. Part of the fluid passes through the shuttle valve and charge pressure relief valve in the motor valve manifold and enters the motor case. Most of the fluid leaving the motor goes through the tubing to the tee in the hoist selector valve subplate, by-passes the in-line filter element and returns to port "B" of the main/whip pump. At pump port "B", the fluid from the motor mixes with the fluid from the charge pump and then re-enters the main/whip pump.

When the control handle (Fig. 1, Item 20) is moved in the lower direction, with a load on the hook, the main/whip pump actuator (DC-3) receives air pressure on the rod end. The actuator then pulls the pump displacement control valve lever and causes the pump to "cam". When the pump cams, fluid is discharged out of the port "B" at charge pressure. As the fluid leaves the main/whip pump it mixes with the fluid from the charge pump. The fluid now passes through the tubing and is filtered by the in-line filter. The filtered fluid now goes to the tee in the hoist selector valve subplate and then to port "B" of the whip hoist motor. At port "B" part of the fluid passes through the shuttle valve and charge pressure relief valve in the motor valve manifold and enters the motor case. Most of the fluid enters the motor and is pressurized from charge pressure to high pressure (5000 psi [340 bar] max). (While lowering a load the motor is pressurizing the fluid. The load on the hook attempts to rotate the motor but the speed of the motor is limited by the amount of fluid passing through it. The pump serves to regulate the amount of fluid passing through the motor.) The high pressure fluid at motor port "A" shifts the shuttle valve and then passes through the tubing and hoist selector valve to the holding valve. At the holding valve, the fluid must pass through the flow control valve before it continues on through the tubing to the main/whip pump "A" port. At pump port "A", the fluid re-enters the cylinder block and its pressure is dropped to charge pressure as it passes through the pump.

When the control handle (Fig. 1, Item 20) is moved in the lower direction, with no load on the hook, the main/whip pump actuator (DC-3) receives air pressure on the rod end. The actuator then pulls the pump displacement control valve lever and causes the pump to "cam". When the pump cams, high pressure (1500 psi [102 bar] max) fluid is pumped out of port "B" of the pump and passes through the tubing to the in-line filter. After filtration, the fluid continues on through the tubing to port "B" of the whip hoist motor. The high pressure fluid then passes through the whip motor, causing it to rotate, and leaves the motor port "A" at charge pressure. The fluid now passes through the tubing, hoist, selector valve, and holding valve re-entering the pump at port "A". During this operation the shuttle valve and charge pressure relief valve in the motor valve manifold do not have fluid passing through them and the only fluid entering the system from the charge pump is fluid replacing internal pump and motor leakage.

Returning the control handle (Fig. 1, Item 20) to neutral exhausts air pressure to the piston of the whip hoist brake releasing valve (P-10) and the valve returns, exhausting the pressure in the brake cylinder. With the release of the pressure in the whip hoist brake cylinder, the whip hoist brake sets. At the same time, the air pressure to the pump acctuating cylinder (DC-3) is exhausted and the main/whip pump returns to the neutral, no flow of fluid, position.

BOOM HOISTING, LOWERING AND POWERING DOWN

With the control handle (Fig. 1, Item 19) in neutral, the boom hoist brake is set and the lock pawl is engaged. Control handle movement, in either the hoist or lower direction, sends air pressure to the boom hoist brake releasing valve (P-13) shifting the valve which directs control pressure into the boom hoist brake cylinder

and boom hoist lock pawl cylinder. Pressure to the brake cylinder releases the brake. Pressure to the lock pawl cylinder releases the pawl. The movement of the control handle also directs air pressure to the "brake off" indicator (I-2) which turns amber to indicate the hoist brake has been signaled to release.

When the control handle is moved in the hoist direction, the boom pump actuator (DC-2) receives air pressure on the piston end. The actuator then pushes the pump displacement control valve lever and causes the pump to "cam". When the pump cams, high pressure (6000 psi [408 bar] max) fluid is pumped out of port "A" and through the tubing to the holding valve. From the holding valve the fluid goes through the tubing to port "A" of the boom hoist motor. At port "A" the high pressure fluid shifts the shuttle valve in the motor valve manifold and then rotates the motor. The fluid leaves port "B" of the motor at charge pressure. Part of the fluid leaving the motor passes through the shuttle valve and charge pressure relief valve in the motor valve manifold and enters the motor case. Most of the fluid leaving the motor goes through the tubing, by-passing the in-line filter element, to port "B" of the boom pump. At pump port "B" the fluid from the motor mixes with fluid from the charge pump and re-enters the boom pump.

When the control handle (Fig. 1, Item 19) is moved in the lower direction, the boom pump actuator (DC-2) receives air pressure on the rod end. The actuator then pulls the pump displacement control valve lever and causes the pump to "cam". When the pump cams, fluid is discharged out of port "B" at charge pressure. As the fluid leaves the boom pump it mixes with fluid from the charge pump. The fluid now passes through the tubing and is filtered by the in-line filter. The filtered fluid now goes through the tubing to port "B" of the boom hoist motor. At port "B", part of the fluid passes through the shuttle valve and charge pressure relief valve in the motor valve manifold and enters the motor case. Most of the fluid enters the motor and is pressurized from charge pressure to high pressure (6000 psi [408 bar] max). (While lowering the boom, the motor is pressurizing the fluid. The weight of the boom and load attempt to rotate the motor, but the speed of the motor is limited by the amount of fluid passing through it. The pump serves to regulate the amount of fluid passing through the motor.) The high pressure fluid at motor port "A" shifts the shuttle valve in the motor valve manifold and then passes through the tubing to the holding valve. At the holding valve, the fluid must pass through the flow control valve before it continues through the tubing to the boom pump "A" port. At pump port "A", the fluid re-enters the pump cylinder block and its pressure is dropped to charge pressure as it passes through the pump.

When the control handle (Fig. 1, Item 19) is moved in the lower direction, with the boom at high angles and no load on the hook, the boom pump actuator (DC-2) receives air pressure on the rod end. The actuator then pulls the pump displacement control valve lever and causes the pump to "cam". When the pump cams, high pressure (1500 psi [102 bar] max) fluid is pumped out of port "B" of the pump and passes through the tubing to the in-line filter. After filtration the fluid continues on through the tubing to port "B" of the boom motor. The high pressure fluid then passes through the boom motor causing it to rotate and leaves port "A" of the motor at charge pressure. The fluid now passes through the tubing to the holding valve and on to re-enter the pump at port "A". During this operation the shuttle valve and charge pressure relief valve in the motor valve manifold do not have fluid passing through them and the only fluid entering the system from the charge pump is fluid replacing internal pump and motor leakage.

Returning the control handle (Fig. 1, Item 19) to neutral exhausts the air pressure to the piston of the boom hoist brake releasing valve (P-13) and the valve returns, exhausting the pressure in the brake and lock pawl cylinders. With the release of pressure in the cylinders the boom brake and lock pawl set. At the same time, the air pressure to the pump actuating cylinder (DC-2) is exhausted and the boom pump returns to the neutral, no flow of fluid, position.

## SWING CIRCUIT OPERATION

With the swing handle (Fig. 1, Item 18) in neutral, pulling the swing brake valve (Fig. 1, Item 28) supplies air pressure to the swing brake releasing valve (P-12) piston and acutates the swing control system. The brake releasing valve shifts and directs control pressure to the swing brakes, releasing the brakes.

With the swing brakes released, control handle (Fig. 1, Item 18) movement toward the operator (swing left) directs air pressure to the piston end of the pump actuator (DC-1). The actuator then pushes on the pump displacement control valve lever and causes the pump to "cam". When the pump cams, high pressure (5000 psi [340 bar] max) fluid is pumped out port "A" of the pump, through a hose to the manifold inside the main frame, through the distribution hoses to port "A" of the swing motors. At port "A" the high pressure fluid

shifts the shuttle valve in the motor valve manifolds. The fluid then passes through the motors causing rotation and leaves the motors at charge pressure. At motor ports "B", part of the fluid passes over the shuttle valves and charge pressure relief valves in the motor valve manifolds and enters the motor cases. Most of the fluid leaving the motors returns to the swing pump "B" port through the hose and distribution manifold, by passing the in-line filter element. At pump port "B" the fluid from the motor mixes with fluid from the charge pump and re-enters the swing pump.

With the swing brakes released, control handle (Fig. 1, Item 18) movement away from the operator (swing right) directs air pressure to the rod end of the pump actuator (DC-1). The actuator then pulls on the pump displacement control valve lever and causes the pump to "cam". When the pump cams high pressure (5000 psi [340 bar] max) fluid is pumped out of port "B" of the pump, through the tubing to the in-line filter. Following filtration, the fluid passes through the tubing and hose to the distribution manifold and then through the hoses to port "B" of the swing motors. The fluid then passes through the motors causing rotation and leaves the motors at charge pressure. At motor port "A", part of the fluid passes over the shuttle valves and charge pressure relief valves in the motor valve manifolds and enters the motor cases. Most of the fluid leaving the motors passes through the hoses and returns to the swing pump "A" port. At port "A", the fluid from the motor mixes with fluid from the charge pump and re-enters the swing pump.

To reset the swing brake, the swing brake valve (Fig. 1, Item 28) is pushed. This action exhausts the air pressure to the swing control valve (C-1) and the piston of the swing brake releasing valve (P-12). When air pressure is removed from the brake releasing valve piston, the valve return, exhausting the control pressure to the brake cylinders, permitting the brakes to set.

## BRAKES

### HOIST BRAKES

The brakes on the three hoist drums are identical. These are on the right hand end of the hoist drums and are protected by easily removable rain shields. They are band type brakes on a 29-1/2" diameter drum that is an integral part of the shaft assembly (hoist winch).

Each of these brakes has a cylinder in the motor compartment that operates the brake through a rocker arm assembly. The rod end of these cylinders contains springs to maintain the brake in the set position. The springs of the brake cylinder are lubricated for protection against rust and wear. A reservoir is mounted to each cylinder to provide for lubricant displacement when the brake is released. The brakes are released by applying control pressure behind the piston. This hydraulic pressure compresses the springs and releases the brake.

Whenever a hoist control handle is returned to the neutral position, the brake sets automatically to hold the load and prevent creeping. When the control handle is moved out of neutral, in either the hoist or lower direction, the brake is fully released. During load lowering, the load is controlled entirely through the hydraulic system. This gives sure, precise control that makes the spotting of heavy loads safe and easy.

### HOIST BRAKE ADJUSTMENT (Fig. 30)

If the crane has not been working regularly it should be worked for a short period to dry the linings and remove any rust that may be on the drum. This can be done easily by hoisting the empty hook and boom (simultaneously) a few times with the brake pedal depressed.

The control pressure should be in the 700/750 psi (48.3/51.7 bar) range while adjusting the brakes.

The pressure at the main and whip brake cylinder pressure taps, Fig. 26, should also be checked. If this reads less than the control pressure the foot operated brake valve needs adjusting (see "Brake Pedal" page 58). This should be done before proceeding with brake adjustment.

The brake bands are suspended from the main frame with coil springs (two springs are used on the boom brake). These should be adjusted so that they lift the upper most brake block clear of the drum about 1/32" (0.8 mm) when the brake is released.

There are also two threaded rods protruding from the main frame that restrain the brake band in the fore and aft direction when the brake is released. These should be set approximately 1/32" (0.8 mm) from the brake band when the brake is set.

When the above adjustments have been made the brake can be adjusted with the brake adjusting nut. This requires two men; one to release the brakes by operating the crane and the other to adjust the brake.

There are two holes through the top of the main frame in line with the main and whip brake cylinders and one hole below the boom hoist wire rope drum. These holes give easy access to the brake adjusting nuts. A 1-1/2" deep socket is required for the adjustment. A brake adjusting tool which incorporates a 1-1/2" deep socket is shipped with each crane.

For proper hoist brake adjustment the brake cylinder rod travel should be 1/4" (6 mm). The brake should then be checked under load. If the load creeps down with the control handle in neutral, the brake band is not holding. If the brake is properly adjusted and will not hold the load, check the brake lining and drum for lubricant contamination or the brake cylinder for broken springs.

SWING BRAKES (Fig. 31)

The swing brakes are multiple disc, spring applied and hydraulically released brakes. The brakes have no adjustment point. If the brakes have no hydraulic pressure to them and do not hold the crane from swinging, they must be rebuilt or replaced.

BRAKE PEDAL (Fig. 29)

When the emergency load release button is depressed, the load can be controlled by modulating the pressure in the end of the main or whip hoist brake cylinder. This is done with the foot brake pedal (see Fig. 22 for a schematic of the brake system). The valve in the brake pedal is a direct acting pressure regulating valve. This valve controls the pressure to the main or whip brake cylinders when the pedal is depressed.

Fig. 29 shows the linkage adjustment between the foot pedal and the valve. With the brake pedal all the way up and while hoisting the whip line, the pressure at the whip hoist brake cylinder pressure tap (Fig. 26) should read the same as the control pressure (700/750 psi). With the brake pedal depressed all the way down and while hoisting the whip line, the pressure at the pressure tap should read 150 psi or less. To increase the pressure, lengthen the linkage. To decrease the pressure, shorten the linkage. The linkage is adjusted by loosening the jam nut. This is most easily accomplished by removing the hinge pin and then the upper half of the brake pedal. CAUTION: Do Not remove the plunger from the valve body or attempt to adjust the brake pedal when the clutch is engaged and the engine is running.

BRAKE PEDAL

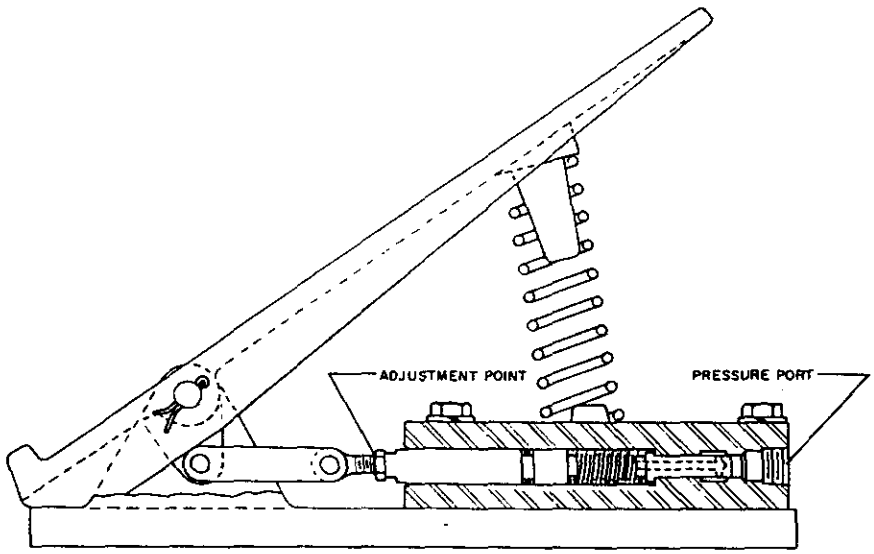


Figure 29 LT-160028

HOIST BRAKES

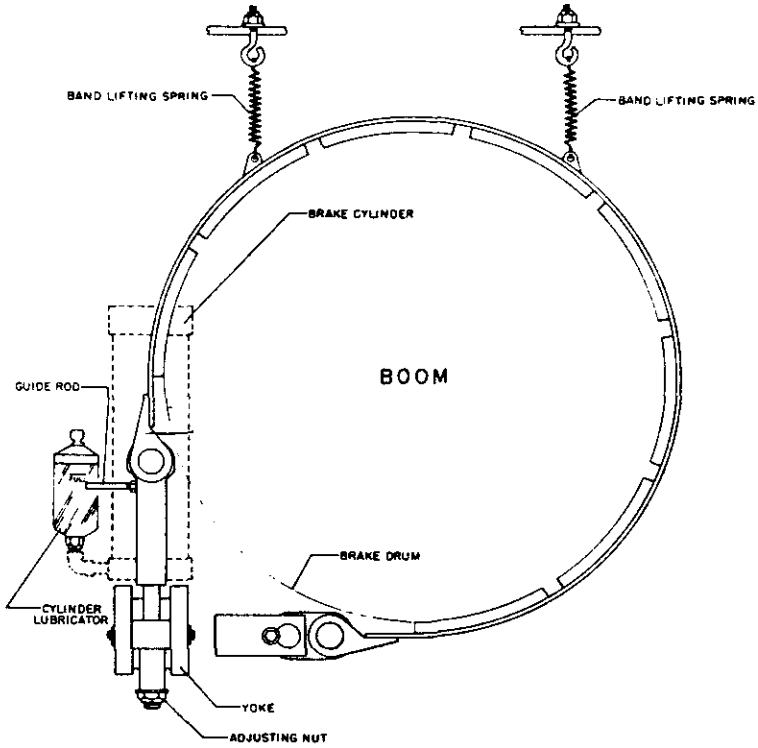


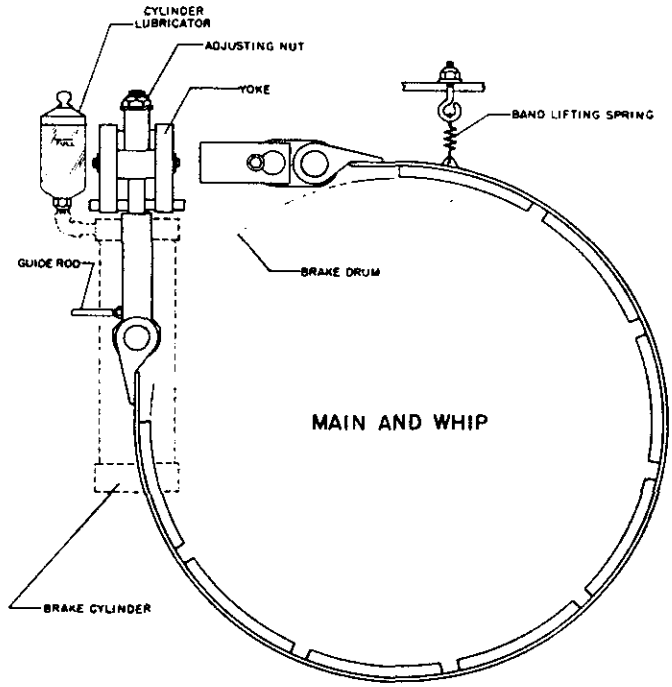


Figure 30

LT-160026

SWING BRAKE

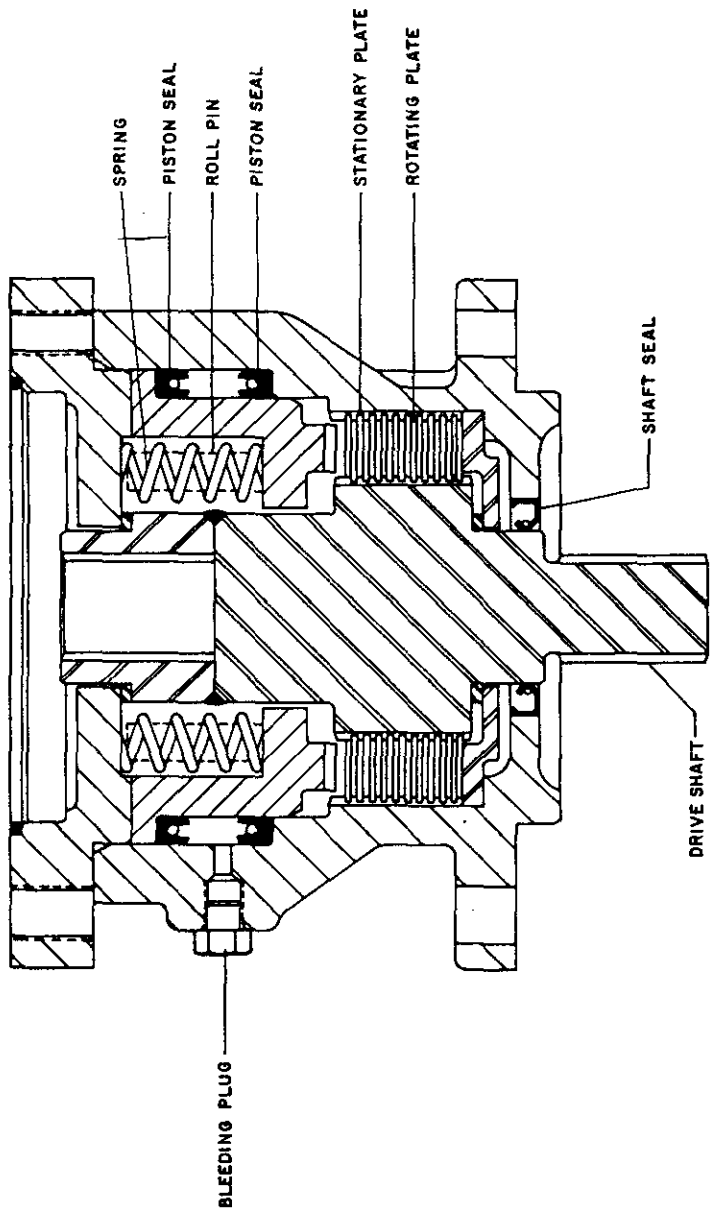


Figure 31

LT-160334

## BRAKE CYLINDER ASSEMBLY (16010250)

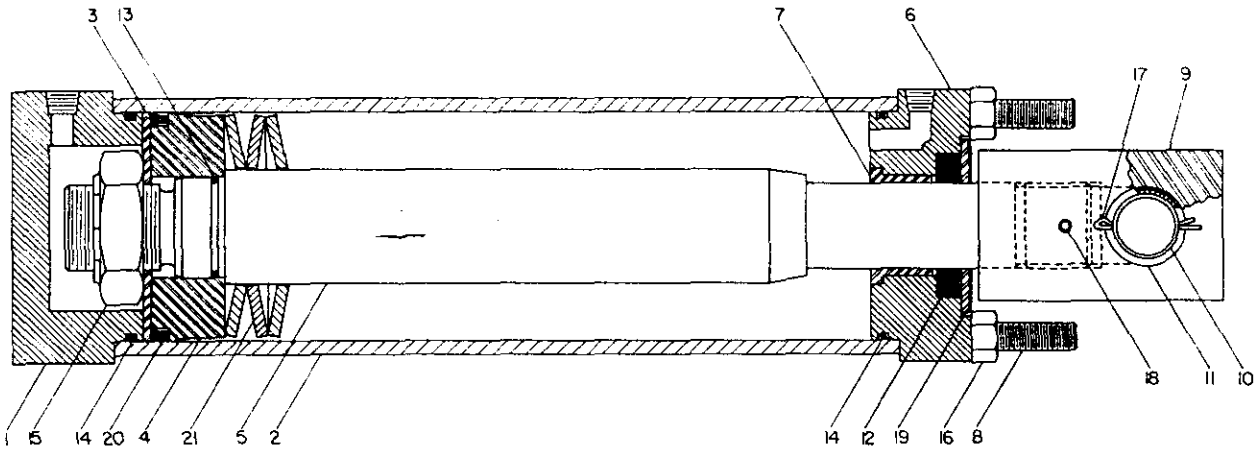


LT-160087

| Item No. | Part No. | Description | No. Req'd. |
|---|---|---|---|
| 1 | 1610251 | CAP | 1 |
| 2 | 1610252 | BARREL, Cylinder | 1 |
| 3 | 1610253 | RETAINER | 1 |
| 4 | 1610254 | PISTON | 1 |
| 5 | 1610255 | ROD, Piston | 1 |
| 6 | 1610256 | CAP, Clevis End | 1 |
| 7 | 1610257 | BUSHING, Hydraulic Brake Cylinder | 1 |
| 8 | 1610258 | STUD, Brake Cylinder | 4 |
| 9 | 1610259 | CLEVIS, Brake | 1 |
| 10 | 1610833 | PIN, Brake Cylinder | 1 |
| 11 | ZB-1120 | BEARING | 2 |
| 12 | YS-1507 | SEAL, Oil | 1 |
| 13 | 2410022-222 | PACKING, O-Ring | 1 |
| 14 | 2410022-240 | PACKING, O-Ring | 2 |
| 15 | 6310243 | NUT, Flexloc #30FK2406, 1-1/2"-6UNC Thin | 1 |
| 16 | 6320080 | NUT, Hex Jam 1/2" | 4 |
| 17 | 6501212 | PIN, Cotter 3/16" x 1-1/2" | 2 |
| 18 | 6571632 | PIN, Spring Slotted Steel Standard 1/4" x 2" | 1 |
| 19 | 7600068 | WASHER, 1-1/2" N. Type A 3.0" O.D. | 1 |
| 20 | 7818034 | SEAL, Piston | 1 |
| 21 | 7818249 | SPRING, Disc | 46 |

## BOOM HOIST HOUSING ASSEMBLY (1613860)

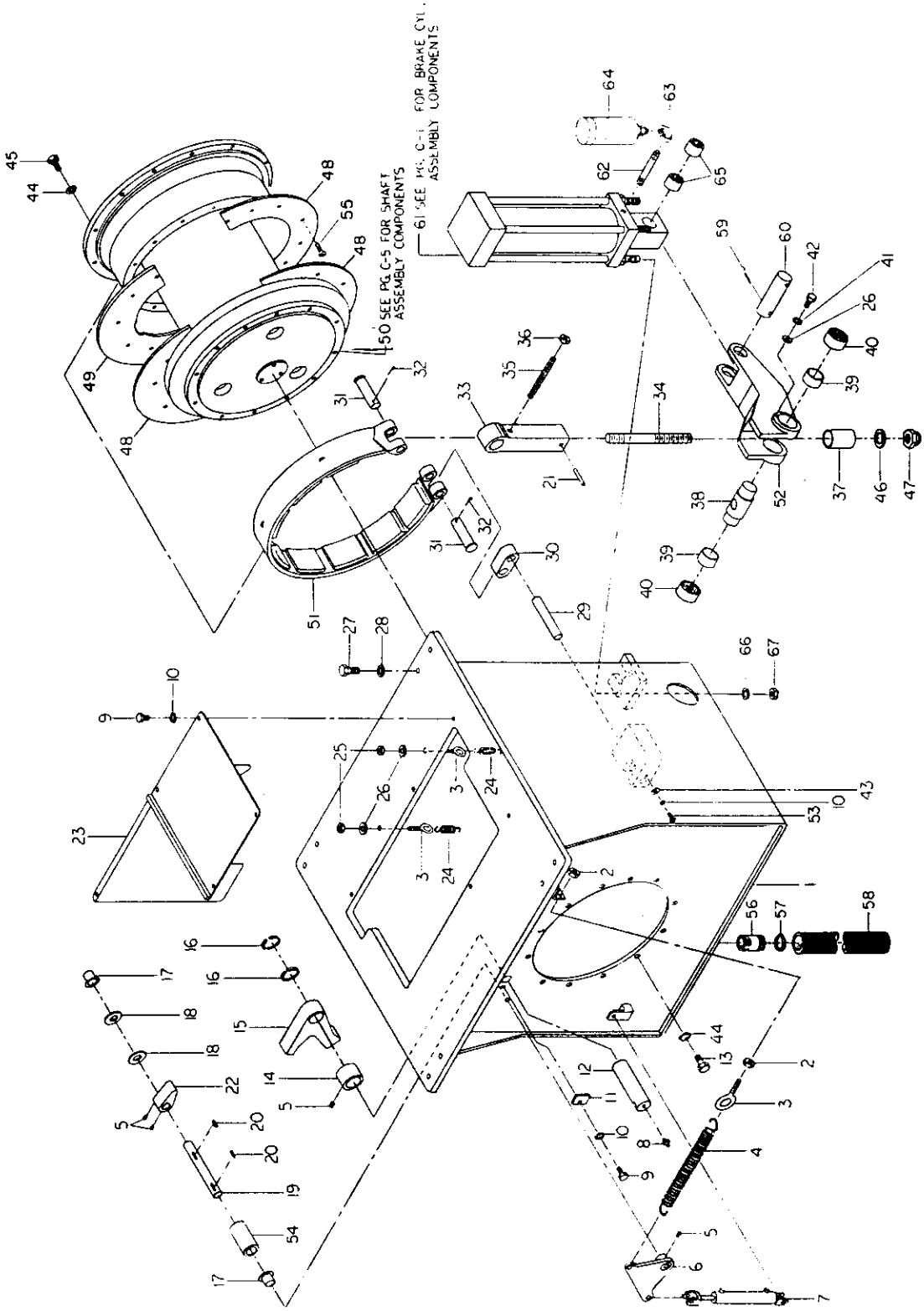

## SWING BEARING MAINTENANCE REQUIREMENTS

The swing bearing of the crane is a forged alloy steel ball type bearing with hardened and ground races. The inner race of the bearing is attached to the crane frame and the outer race is attached to the pedestal flange. The gear teeth of the bearing are an integral part of the outer race. The bearing must be mounted to the pedestal flange as directed by the National Supply Company technical standard TD-16001.

In order to assure trouble free operation of the swing bearing, several maintenance operations must be regularly performed. The bearing balls and races must be thoroughly lubricated once a week with a suitable grease as specified in the lubrication section. There are lubrication fittings for the swing bearing in the wall of the main frame below the left-hand end plate of the main and whip hoist winches. Hoses are attached from these fittings to the inner race of the swing bearing for piping the grease to the bearing. The bearing and swing pinion teeth must have an adequate coating of a high quality lubricant such as Jet Lube, Inc. "Kopr-Kote" compound for lubrication and corrosion resistance.

Grease sampling and tilt or lift measurement can be good indicators of swing bearing wear and general condition. However, the conditions must be closely monitored on a regular and long term basis. Since loading and mounting greatly affect the "in service lift (tilt)" of a bearing, the exact conditions must be duplicated each time the lift is measured. These conditions include swing bearing bolt torque, crane orientation, indicator location, boom angle(s) and load(s). Knowing the lift of a newly mounted bearing, the lift can be periodically measured (approximately 6 month intervals), monitored and evaluated. A substantial increase in lift could indicate bearing damage, bearing abnormal wear, the approach of the end of the service life of the bearing or bearing mounting abnormalities. The lift figures are substantially more valuable as a case history.

Grease sampling must also be maintained as a case history. The significant number of variables involved with bearing service prohibit establishing a "normal" metallic particle concentration in the lubricant. Each grease sample, taken from the bearing assembly hole, will likely show some metallic particles. The samples should be checked for a marked increase in metallic particle concentration.

A spot check of the tightness of the inner and outer race swing bearing bolts should be performed monthly. Every six months of the inner and outer race bolts should be re-torqued. Loose bolts can lead to fatigue failure of the bolts and to detrimental binding and wear of the swing bearing balls and races. The required bolt torque is given in the table on page 62.

## STRUCTURAL MAINTENANCE

The structural members of the OS-435 crane are coated with a zinc-rich primer, epoxy second coat, polyurethane tie coat and acrylic top coat. The boom, main frame and gantry should be inspected for deformed, cracked, corroded or missing members on a monthly basis. Corroded areas should be cleaned of corrosion, properly primed and painted. Cracked or deformed members should be repaired. Missing members should be replaced. Prior to conducting structural repair or replacement the National Supply Company should be contacted for feasibility of repair, material specifications and welding procedures.

Crane assembling cap screws should be checked for tightness every six months. The chart given on page 62 can be used as a guide for proper torque requirements.

CAUTION: When welding on the crane, the ground (earth) for the welder must be above the swing bearing. DO NOT ground through the swing bearing.

CRANE ASSEMBLING TORQUE VALUES IN FT-LBS*

| SCREW SIZE INCHES |  GRADE 2 |  GRADE 5 |  GRADE 7 |  GRADE 8 |  HEX SOCKET HEAD |  ** 12 POINT HEAD |
|---|---|---|---|---|---|---|
| 1/4 | 6 (.8) | 9 (1.2) | 12 (1.6) | 13 (1.8) | 14 (1.9) | — |
| 5/16 | 11 (1.5) | 18 (2.5) | 24 (3.3) | 28 (3.9) | 30 (4.1) | — |
| 3/8 | 19 (2.6) | 31 (4.3) | 43 (5.9) | 46 (6.4) | 50 (6.9) | — |
| 7/16 | 30 (4.1) | 50 (6.9) | 69 (9.5) | 75 (10) | 81 (11) | — |
| 1/2 | 45 (6.2) | 75 (10.4) | 106 (14) | 115 (15) | 121 (16) | — |
| 6/16 | 66 (9.1) | 110 (15) | 150 (20) | 165 (22) | 176 (24) | — |
| 5/8 | 93 (12.9) | 150 (20) | 209 (28) | 225 (31) | 240 (33) | — |
| 3/4 | 150 (20.7) | 250 (34) | 350 (48) | 370 (51) | 395 (54) | — |
| 7/8 | 202 (27.9) | 378 (52) | 550 (76) | 591 (81) | 629 (86) | — |
| 1 | 300 (41.5) | 583 (80) | 825 (114) | 893 (123) | 964 (133) | — |
| 1-1/8 | 474 (65.5) | 782 (108) | 1304 (180) | 1410 (195) | 1523 (210) | — |
| 1-1/4 | 659 (91.1) | 1097 (151) | 1650 † (228) | 1750 † (242) | 1908 (263) | 2100 † (290) |
| 1-3/8 | 884 (122.3) | 1461 (202) | 2400 (331) | 2400 (331) | 2400 (331) | — |
| 1-1/2 | 1057 (146.2) | 1748 (241) | 2600 † (360) | 2850 † (394) | 3060 (423) | 3350 † (463) |
| 1-5/8 | 1448 (200) | 2392 (330) | 3985 (551) | 4311 (596) | 4655 (643) | — |
| 1-3/4 | — | — | 4650 † (643) | 5050 † (698) | 5450 (753) | 5950 † (822) |

*VALUES IN PARENTHESES ARE IN M-Kg.
**BOLT GRADE IS ISO 12.9

LT-160044

†Threads lubricated in accordance with National Supply Company Technical Standard TD-16001. Other torque values are for clean, dry threads.

## HYDROSTATIC DRIVE TROUBLE SHOOTING

The following instructions and fault-logic diagrams should provide a comprehensive guide to trouble shooting the hydrostatic drives of the OS-435 crane.

A fault-logic diagram is provided for each of the five problems which experience has shown to cover the majority of problems encountered with hydrostatic drives. The applicable diagram should first be found and then followed to trouble shoot the hydraulic transmission. The paragraphs below give specific instructions covering steps in the fault-logic diagrams.

### DISPLACEMENT CONTROL VALVE INSPECTION

Disconnect the pump actuating cylinder and remove the mounting bracket and cylinder from the pump. Remove the valve mounting cap screws and lift the valve away from the pump. A gasket and three O-Rings are used beneath the valve and the swing pump has an orifice inside the inner most O-Ring. Care must be exercised to be certain no parts are dropped into the pump case. Refer to figure 42.

The valve linkage (connection to swashplate), pins and retaining rings should all be closely examined. Confirm the torsional spring is not broken and the orifice (when used) is not plugged. Inspect the O-Rings for damage.

The valve is removed form the pump by removing the pin connecting the valve linkage to the swashplate angle feedback link. Upon replacement of the valve, new O-rings and a new gasket of the proper thickness should be used. The valve must be carefully lowered to insure proper location of the O-Rings, gasket and orifice.

DISPLACEMENT CONTROL VALVE MOUNTING

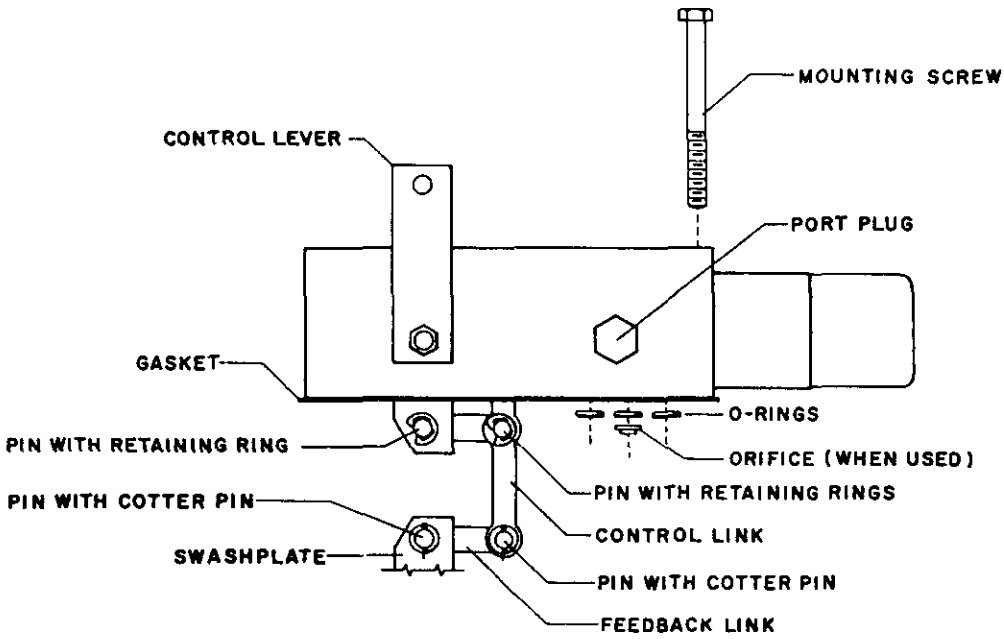


Figure 42

LT-160037

DISPLACEMENT CONTROL VALVE ADJUSTMENT

WARNING: The variable pump control valve assembly is adjusted at the factory. At no time should the control valve be readjusted in the field. If the adjustment screws have been tampered with, use the following procedure to make the correct control valve adjustment. Refer to Figure 43.

1. Remove the control valve assembly from the pump prior to making the adjustments. See "Displacement Control Valve Inspection".

2. Remove the end plug from the centering spring mechanism. With locknut (Item 1) loose and holding the centering spring housing (Item 3), turn the spring adjusting screw (Item 2) until the screw is just touching the centering spring washer; thus taking the free end play out of the centering spring mechanism. This is best done by exerting a light back and forth force on the control valve spool (Item 6) at the same time the adjusting screw is being turned down. *Care must be taken not to compress the centering spring (Item 4)* beyond its installed height. Tighten the locknut (Item 1) and recheck the spool (Item 6) for end play.

3. Adjust the control valve spool (Item 6) for the neutral position. Remove the 7/16"-20 boss seal plugs (Item 5) on either side of the control valve housing (Item 7) in the control valve spool bore location of the casting to reveal the servo cylinder porting holes (Item 8). Loosen the locknut (Item 9) and adjust the control valve spool by *screwing the centering spring housing (Item 3) in or out so that the open areas* (Reference A) between the spool lands and sides of th porting holes are equal. Tighten the locknut (Item 9), recheck the open areas, and reinstall the two 7/16"-20 boss seal plugs.

4. Re-install control valve on pump. Care should be exercised not to damage the O-Rings under the valve and to properly position the orifice (If used). Carefully check the operation of the pump after the control valve adjustment.

DISPLACEMENT CONTROL VALVE ADJUSTMENT

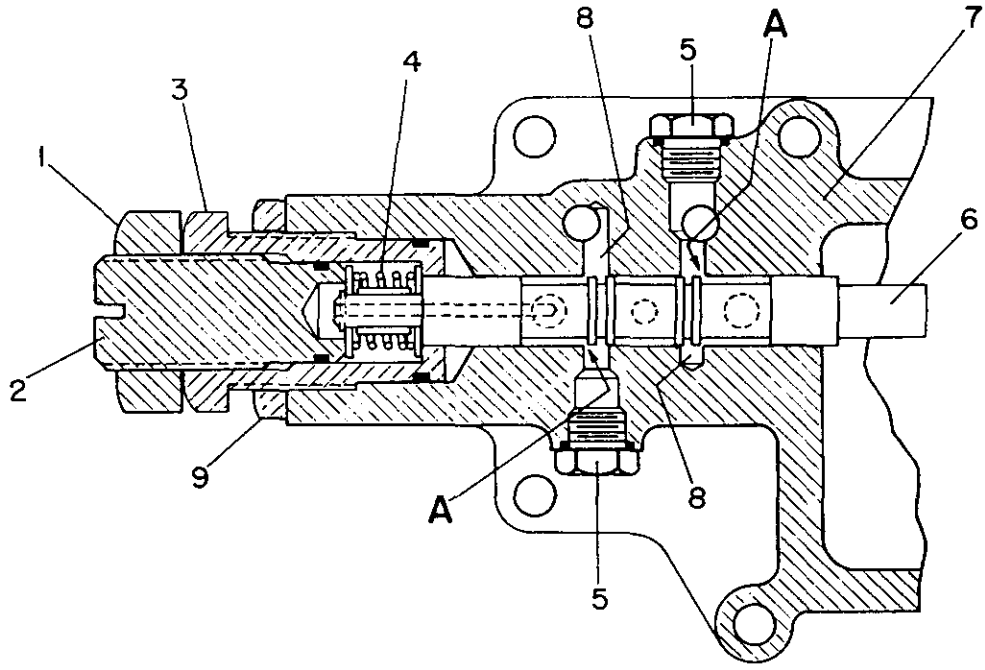


Figure 43

LT-160038

STYSTEM RELIEF VALVE INSPECTION (Figure 47)

Using a new or borrowed relief valve of the same setting, replace the system relief valves one at a time, checking the system operation after each replacement. If the problem ceases, discard the faulty relief valve.

Inspect the valves for the proper setting. The first two digits of the setting are stamped on the end of the valve. For instance 50 for 5000 psi (340 bar), 60 for 6000 psi (413.8 bars), and 15 for 15000 psi (103.4). Both of the swing motor relief valves are stamped 50. The main and whip hoist motors have a 5000 psi relief valve on the left side and a 1500 psi relief valve on the right side, when viewed from the valve manifold block end. The boom hoist motor has a 6000 psi relief valve on the left side and a 1500 psi relief valve on the right side, when viewed from the valve manifold block end.

RELIEF VALVE OPERATION

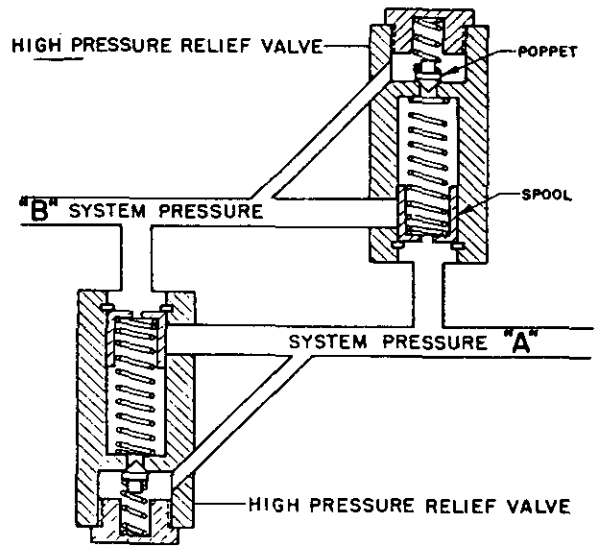


Figure 44 LT-160039

SHUTTLE VALVE INSPECTION (Figure 47)

The valve spool must move smoothly in the bore. Inspect for worn, galled or broken parts. The spool and valve manifold block are matched and are not interchangeable.

The swing motor shuttle valve spool has a spring and washer on each end. The hoist motor shuttle valves are blocked to shift only when the system has high pressure at motor port "A". For this reason the hoist motor shuttle valve spools, when viewed from the valve manifold block end, have a spring and washer on the left-hand end and a spool extension or spacer on the right-hand end.

CHARGE PRESSURE CHECK VALVE INSPECTION (Figure 45)

*CHARGE PRESSURE CHECK VALVE*

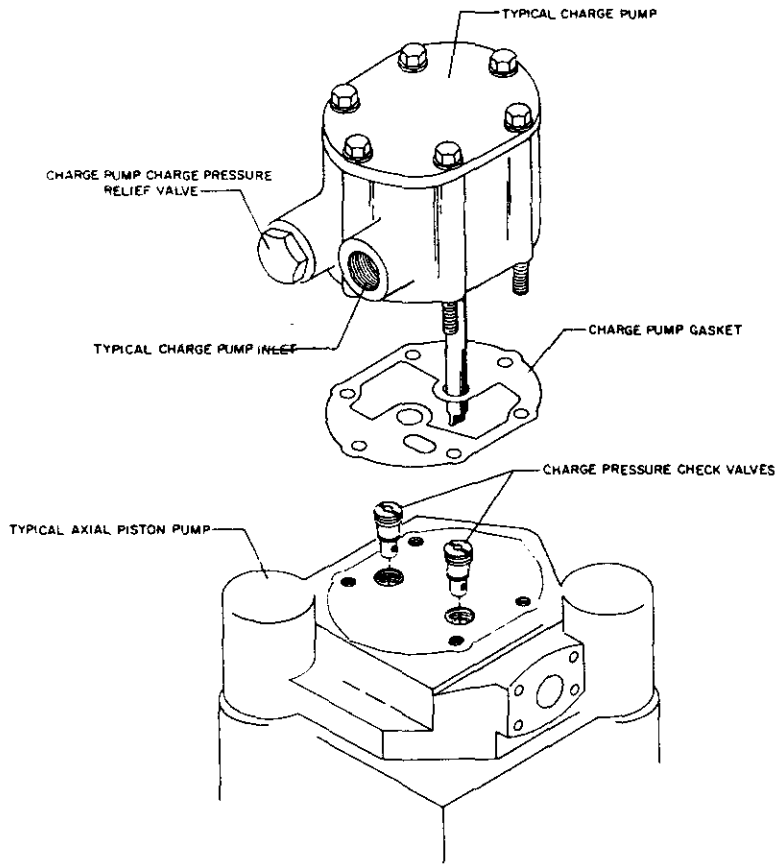


Figure 45 LT-160040

Carefully remove the charge pump to expose the cartridge check valves. Inspect the valves for spring load, proper seating, damaged O-rings and foreign material. When the problem is in one direction only, interchange the check valves to see if the problem changes sides. A new gasket should be used when the charge pump is replaced on the axial piston pump.

CHARGE PRESSURE RELIEF VALVE INSPECTION (Figures 46 and 47)

Inspect for foreign material holding the poppet open, galling or wear on the poppet and seat, a broken spring or an improper setting.

## CHARGE PUMP

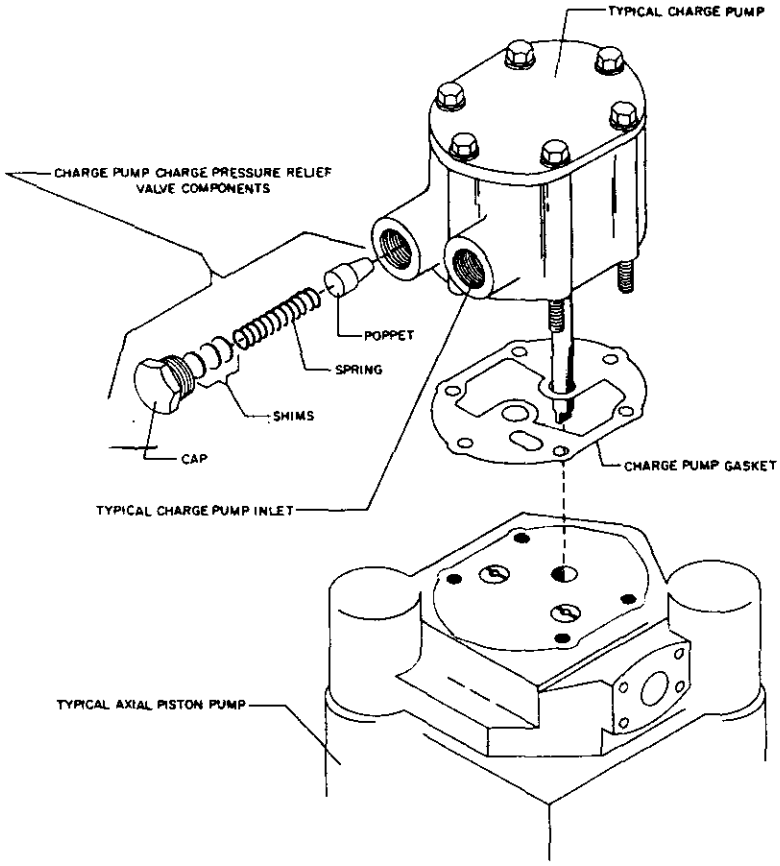


Figure 46

LT-160041

MOTOR VALVE MANIFOLD ASSEMBLY

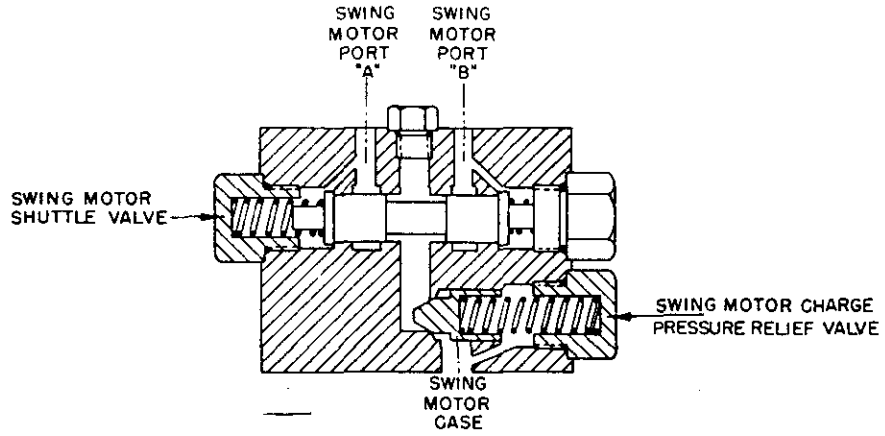


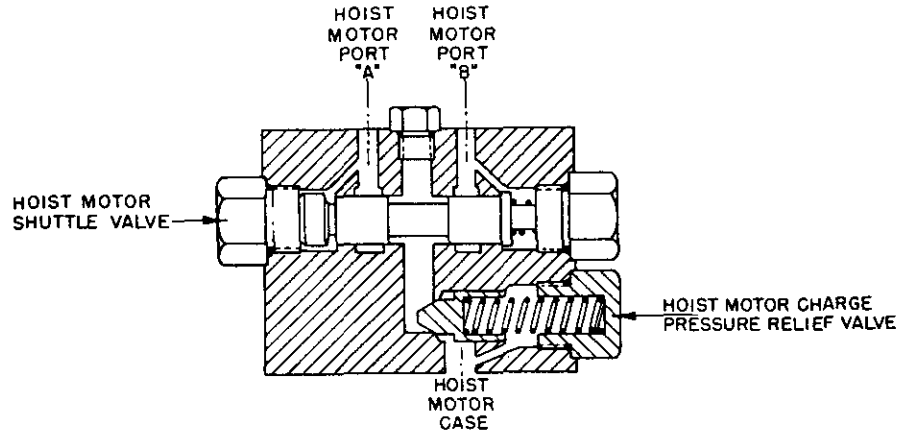


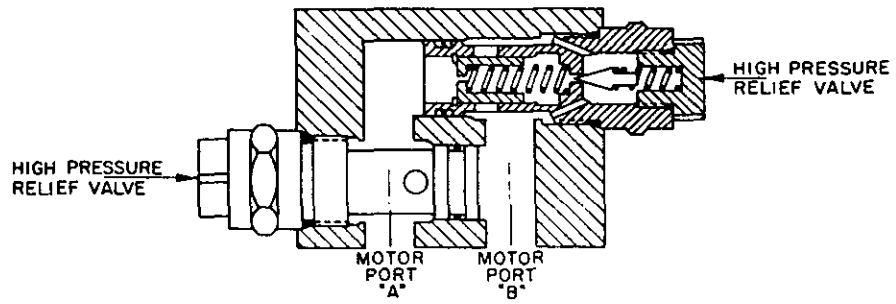


Figure 47

LT160015

CHARGE PUMP INSPECTION (Figures 45 and 46)

Carefully remove the charge pump. The shaft and internal gears must turn smoothly. Futher disassembly of the charge pump is not recommended. Check the condition of the pump drive clevis and tang.

CHECKING CHARGE PRESSURE

The proper gages for checking charge pressure are provided in the operator's cab on the right-hand rear panel. In neutral charge pressure should be 190 to 300 psi (13.1 to 20.7 bar). While powering down charge pressure should be 180 to 290 psi (17.4 to 20 bar). While hoisting or lowering a load, or while swinging, charge pressure should be 160 to 280 psi (9.3/19.3 bar). NOTE: PRESSURES SLIGHTLY ABOVE THOSE NOTED ARE NOT UNCOMMON. THE PRESSURE, HOWEVER, SHOULD NOT EXCEED 400 PSI (27.6 BAR).

The charge pressure system has two relief valves, one in the charge pump and one at the motor. The charge pressure relief valve at the motor has a lower pressure setting to provide for system cooling. In neutral and while powering down, the charge pressure relief valve at the pump is used. While hoisting or lowering a load, or swinging the crane, the charge pressure relief valve at the motor is in use.

INTERPRETING CHARGE PRESSURE

NO CHARGE PRESSURE - If there is no charge pressure at any position of the control lever, the charge pump is probably at fault. Most likely the drive shaft has been broken. To confirm the diagnosis, remove the charge pump and examine for broken parts.

Complete lack of charge pressure could also be due to spring breakage, damage, or dirt in the charge pressure relief valve located in the charge pump. Examine the relief valve for dirt, wear, and possible sticking.

FLUCTUATING PRESSURE - If the charge pressure is erratic with control lever in neutral and in the side position, with pressure level perhaps a little lower than expected, this may indicate cavitation of the charge pump from low fluid level in the hydraulic tank, collapsed suction hose, or dirty suction filter elements. Check for these conditions and replace the suction line filter elements.

CHARGE PRESSURE DROPS WHEN CONTROL LEVER IS SHIFTED - If the charge pressure holds steady when the control lever is in neutral, with about the right expected pressure, then falls rapidly as the control lever is moved to a side position, this usually indicates that the charge fluid is escaping into the case through clearances which open up as the control lever tries to cam the pump. The most likely fault is a scored valve plate. When the valve plate becomes scored, fluid pressure can get under it and tends to lift it from intimate contact with the bearing plate. This allows some of the high pressure loop fluid and some of the charge pump fluid to escape into the pump or motor case. With this condition the charge pressure may fall very low, too low to cam the pump swashplate to more than a small angle. If charge pressure falls below 140 psi (9.7 bar), replacement of the damaged pump and motor is necessary.

If charge pressure drops only when trying to power down an empty hook or boom or drops only when swinging one direction, the shuttle valve in the motor valve manifold is probably shifted and held. A similar condition, however, will exist if an O-ring underneath the displacement control valve is damaged and leaking. (See Figures 42 and 47).

NOTE: Charge pressure tends to increase with an increase in engine speed. The lowest acceptable charge pressure is 140 psi (9.7 bar).

CHECKING HIGH PRESSURE

If the charge pressure seems to respond normally as the control handle, in the operator's cab, is moved out of the neutral position, perhaps drooping slightly but not drastically, check the high pressure gage in the right-hand console in the operator's cab. For a properly operating system, the pressure in the loop should be charge pressure when the control handle is in neutral. However, as the control handle is moved to hoist a load or swing the crane, the pressure should immediately rise to the value required by the load on the system.

INTERPRETING HIGH PRESSURE

NO HIGH PRESSURE CAN BE DEVELOPED - If there is very little or no rise in loop pressure when the control handle, in the operator's cab, is moved out of neutral, one of the high pressure relief valves, in the motor valve manifold may be seized in the open position or damaged. Since there are two high pressure relief valves, one for each direction of operation, try moving the control handle (without a suspended laod) into hoist and powerdown. If pressure can be developed in one direction and not in the other, one of the relief valve poppets is probably damaged or seized. If pressure cannot be developed in either direction, a relief valve spool may be seized open. Suspected relief valves should be removed, inspected, cleaned and replaced if such is required. See figures 44 and 47 for pictorial descriptions. NOTE: When replacing a relief valve be certain the pressure setting of the replacement is correct. See "System Relief Valve Inspection".

FULL HIGH PRESSURE CANNOT BE DEVELOPED - If only partial pressure is obtained on the high pressure gage when the control handle is moved out of neutral, one of three faults may be present. Assuming charge pressure had been checked and found to be normal, the first fault may be a leaking charge pressure check valve. One or both check valves which permit the feeding of charge pump fluid into the loop may be damaged or sticking. If this condition exists, fluid is escaping from one side of the system loop into the opposite side of the system loop through the charge pump circuit. Symptoms of this fault would be fairly normal operation of the system when unloaded, but an inability to build up high pressure (therefore torque) for heavy loads. A system with this fault may also experience overheating. If the system will not develop pressure in either hoist or powerdown, a leaking check valve is not a likely fault unless, by coincidence, both check valves are damaged and leaking. If the system fails to develop pressure in one direction, inspect these valves.

The second possible fault is excessively worn piston slippers. Worn slippers cause excessive leakage of fluid into the case, seriously reducing performance of the system. Sypmtoms would be similar to leaky check valves. A major factory overhaul is recommended for the hydraulic transmission.

The third possible fault is the installation of a relief valve with a pressure setting below the specified requirement. (See "System Relief Valve Inspection"). Replace any relief valves of improper setting.

EXCESSIVE HYDRAULIC SYSTEM NOISE

Cavitation or internal pump or motor damage from contamination are the most common causes of excessive pump or motor noise. When excessive noise is apparent the following items may be the cause:

1. Dirty Charge Pump Suction Line Filter - causes cavitation of charge pump.
2. Restriction in Charge Pump Suction Line - causes cavitation of charge pump.
3. Improper Hydraulic Fluid - heavy fluids can cause cavitation.
4. Water in the Hydraulic Fluid Forming an Emulsion - can act like a heavy fluid and cause cavitation.
5. Air Entrained in the Hydraulic Fluid - causes cavitation and excessive noise. (See air in hydraulic fluid)

AIR IN HYDRAULIC FLUID

Air entrained in the hydraulic fluid can be the cause of excessive noise, low pressures and extensive damage to hydraulic components. Check all lines and connections, especially those in the charge pump suction routing, for possible leaks which would permit air to enter the system. Check the fluid level in the hydraulic tank. A low fluid level will allow air to enter the system through the charge pump suction line.

PUMP AND MOTOR SHAFT SEAL REPLACEMENT (Figure 48)

NOTE: It is recommended that all shaft seal parts be replaced.

1. Remove the large retaining ring located on the shaft end of the pump or motor. Remove the side opposite the tangs from the groove first.

2. Remove the aluminum housing. It is held in place by the friction of the O-Ring on its outside diameter. Pry the housing toward the end of the shaft until the O-Ring is free.

3. Remove the aluminum housing from the shaft. This part is actually an assembly that is being held together by the friction of an internal O-Ring. It will normally remain assembled until physically separated.

4. Behind the aluminum housing is the bronze sealing ring. This ring is also held in place by internal O-Ring friction. Work this part free and carefully slide over the shaft.

   CAUTION: This part is easily damaged and extreme care must be exercised when handling.

5. All of the shaft seal parts, which are included in the shaft seal kit, have now been removed. It is recommended that this entire shaft seal be replaced.

6. Prior to assembly, lightly lubricate all parts with clean hydraulic fluid, place one O-Ring in the inside diameter of the aluminum housing. Place the six (6) springs in the cavities in the aluminum housing. The shaft spline should be covered with thin, clean plastic to protect the parts from damage by the shaft during assembly.

7. Slide the bronze sealing ring over the shaft and onto the shaft pilot diameter with the O-Ring facing the motor or pump. Using clean hands, work the ring into place using hand force only.

8. With clean hands, insert the stationary seal pilot into the aluminum housing, locating the notch in the stationary seal over the pin in the housing.

9. Install the O-Ring on the outside diameter of the aluminum housing then slide it into place against the bronze sealing ring. Since this is a spring loaded assembly, it may be necessary to push against the aluminum housing to expose the retaining ring grooves.

10. Install the retaining ring with the beveled side out putting the side opposite the tangs into the groove first. Be certain the retaining ring has snapped into its groove completely.

PUMP OR MOTOR SHAFT SEAL

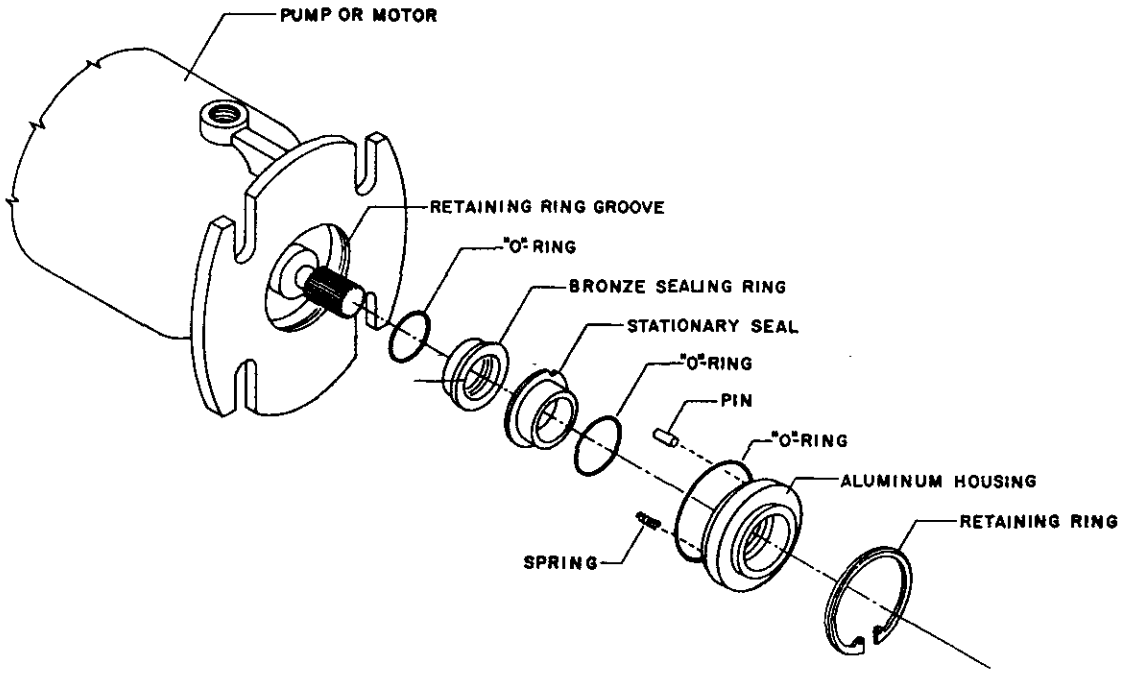


Figure 48

LT-160042

## PUMP AND MOTOR REPLACEMENT

Whenever trouble shooting procedures have determined that the hydrostatic transmission must be replaced certain precautions and steps should be followed. Generally the pump and motor(s) should be changed out as a system. A new pump or motor can become damaged if operated in conjunction with a used unit.

As always, the prime consideration when working on the hydraulic system is to insure no contamination is introducted into the system. When replacing a pump and/or motor the following basic outline should be used. The kill valve in the operator's cab should be depressed prior to opening any hydraulic connections.

1. Remove the damaged units and replace with the new units.
2. Using the plugs and covers from the new units, cover and plug the ports of the old units. Many old units are salvageable when removed from service, but can suffer irreparable damage if not properly protected.
3. Replace all filter elements.
4. If any debris is present in the hoses or tubing, the hoses and tubing should be flushed clean with a suitable solvent and blown dry.
5. Connect all tubing and hoses replacing all related O-Rings.
6. Using clean hydrulic fluid, hand fill the pump and motor cases.
7. Fill the hydraulic tank to the proper operating level.
8. Double check all hydraulic connections which have been disturbed.
9. Double check all pump and motor mounting screws.
10. Double check the adjustment of the pump acutating cylinder.
11. Disengage the clutch.
12. Start the engine and set at the low idle speed (1000 RPM).
13. Manually engage the clutch briefly six to eight times. This action permits the pumps to receive lubrication prior to being run continuously.
14. Fully engage the clutch and observe the charge pressure in the operator's cab. The charge pressure should be 180-200 psi.
15. Observe the level of the fluid in the hydraulic tank and add fluid if necessary.
16. Operate the crane under no load, observing charge pressures.
17. Operate the crane under load, observing charge pressures. Engine RPM should be 1500 anytime a load is lifted. Charge pressure should be 160-180 psi during operation.
18. Inspect the system for hydraulic leaks and correct any abnormalities.

## PUMP AND MOTOR REPAIR

Any repair of the axial piston pumps and motors requiring the removal of the end cap or front cover is not recommended to be performed in the field. Major repairs should only be attempted by experienced, qualified and properly equipped personnel. Only minor repairs, such as those discussed in the hydrostatic drive trouble shooting section, should be performed in the field.

## EMERGENCY LOAD LOWERING

In an emergency created by the loss of control pressure, loss of air pressure, loss of diesel power or malfunction of the hydraulic transmission, a load can be lowered by the following procedure. WARNING: THIS PROCEDURE IS NOT FOR USE ON THE BOOM HOIST SYSTEM.

1. Kill the diesel engine.
2. Engage the clutch by hand.
3. Remove the shuttle valve spool from the hydraulic motor of the hoist which must be lowered. Note the orientation of the valve spool and replace the plugs in the manifold block.
4. Remove the hose from the bottom of the brake cylinder of the hoist which must be lowered and connect a hand operated hydraulic pump to the brake cylinder.
5. Slowly apply hydraulic pressure to the brake cylinder until the wire rope drum begins to turn. The speed of the drum should not exceed 30 RPM. The drum can be slowed or stopped by lowering the pressure to the brake cylinder. CAUTION: Do not over pressure the brake cylinder. Maximum pressure should not exceed 800 psi (55.2 bar).
6. Upon completion of the lowering, clean and properly re-install the shuttle valve spool, reconnect the hose to the brake cylinder and disengage the clutch by hand.

   NOTE: Light line loads may not be able to over come the friction forces in the hoist system even when the brake is fully released.

# TECHNICAL STANDARDS

ARMCO **National Supply Company**
Division of Armco
Gainesville, Texas 76240

| EFFECTIVE DATE | NO. TD-16001 |
|---|---|
| 2-25-80 | PAGE 1 |

| PREPARED BY | APPROVED BY |
|---|---|
| J.E. Cabb III | A.B. Shockley |

SUBJECT

INSTALLATION OF PEDESTAL MOUNTED CRANE; MOUNTING FLANGE, SWING BEARING AND POWER PACKAGE.

## PROCEDURE FOR ATTACHING MOUNTING FLANGE TO PEDESTAL

1. The top of the pedestal is to be round within 1/4" (6.4 mm) on the diameter without temporary braces, jacks, wedges or any other restraint.

2. The top of the pedestal is to be flat, square and in a plane to within ±0.030" (0.762 mm) and ±0°-30'.

3. Outside nominal diameter of the pedestal top is to be:

| CRANE MODEL | PEDESTAL DIAMETER |
|---|---|
| OS-435 | 90" (2.286 m) |
| OS-215 | 79-1/2" (2.019 m) |
| OS-105 | 66" (1.676 m) |
| H-65A | 71-1/2" (1.816 m) |
| OS-45 | 54-1/2" (1.384 m) |

4. Welding procedures used to join the mounting flange to the pedestal should be such that the distortion introduced into the bearing mounting surface conforms to the limits outlined below. Welding procedures to be compatible with mounting flange material.

   NOTE: The welding of the mounting flange to the pedestal and the installation of the pedestal must be complete prior to the swing bearing and the crane power package installation.

## PROCEDURE FOR INSTALLING THE SWING BEARING AND CRANE POWER PACKAGE

1. Check the twist between the swing bearing and mounting flange (see Figure 2).

   A. Prepare the mounting surfaces by removing paint and surface imperfections. Do Not use tools or abrasives that will damage the machined mounting surfaces.

   B. Install three guide bolts, approximately 10" long (25.4 cm), in the outer race of the bearing, spaced 120° apart. Set only the bearing on three spacers of equal length with the guide bolts inside the spacers (see Figure 3).

      NOTE: The outer race ball path hardness gap is marked with a "G" stamped in the upper or lower face of the race. This point should be placed 90° from the direction of highest anticipated bearing load.

   C. Move a suitably mounted dial indicator radially from the outside edge of the mounting flange to the inside edge of the flange surface beside each hole in the mounting flange. (see Figure 4).

   D. Record the total indicator reading. The maximum allowable total reading for twist is 0.010 inches (0.254 mm).

   E. If the mounting flange is out of tolerance corrective measures must be executed and new twist readings obtained.

2. Obtain the shim gap between the swing bearing and mounting flange.

   A. With the bearing in place on spacers as in 1B above, measure the distance between the bearing and flange beside each hole in the mounting flange at the bolt circle of the flange with a suitably mounted dial indicator. Record each measurement. The minimum distance will be the zero point (no shim required).

   B. The maximum total waviness or out of flat (shim thickness) is not to exceed 0.050 inches (1.27 mm). (see Figure 1).

   C. If the mounting flange is out of tolerance, corrective measures must be executed and new out of flat readings obtained.

A. With the mounting flange within the tolerances outlined above for twist and wave and shim thicknesses for each bolt hole determined, raise the swing bearing, remove the three spacers and lubricate the mounting surfaces with Jet Lube, Inc., "Kopr-Kote" compound or equivalent. Lower the bearing (placing the guide bolts in the same holes) to within approximately 1/4" (6.4 mm) of the mounting flange.

NOTE: Small spacers may be used to maintain the 1/4" (6.4 mm) gap.

B. Install the proper thickness shim(s) (as determined in 2A) at each bolt location to shim the mounting flange flat within 0.005 inches (0.127 mm) total indicator reading and install the bolt and washer. (see Figure 5). Do Not allow the shims to overlap.

NOTE: The shims, bolts, and washers are to be those provided by National Supply Company. The bolts should be lubricated with Jet Lube, Inc., "Kopr-Kote" compound or equivalent.

C. Lower the swing bearing onto the shimmed surface of the mounting flange. Do Not allow the shims to overlap.

D. Tigthen the outer race bolts to approximately 500 ft.-lbs. (70 m-kg).

4. Mount the crane power package on the swing bearing.

A. Prepare the mounting surfaces by removing paint and surface imperfections. Do Not use tools or abrasives that will damage the machined mounting surfaces.

B. Lubricate the power package and swing bearing mounting surfaces with Jet Lube, Inc., "Kopr-Kote" compound or equivalent.

C. Install two guide bolts, of appropriate lengths, in the power package.

D. Lower the crane onto the swing bearing aligning the bolt patterns in the bearing and crane frame.

CAUTION: Care must be used to prevent damage to the swing pinion(s) or swing bearing gear as the crane is lowered.

E. Install two bolts fore and two bolts aft through the swing bearing into the power package (see Figure 5).

CAUTION: Do Not release the power package from the lifting apparatus until it is securely bolted to the swing bearing.

NOTE: All bolts should be lubricated with Jet Lube, Inc., "Kopr-Kote" compound or equivalent. Some crane models incorporate frames requiring nuts and lockwashers. All bolts, nuts and washers to be those supplied by National Supply Company.

F. Rotate the crane and install the remainder of the inner race bolts as the crane is indexed around.

5. Torque the inner and outer race swing bearing bolts in accordance with the table below.

| BOLT DIAMETER | GRADE 7 BOLT | GRADE 8 BOLT | GRADE ISO 12.9 BOLT |
|---|---|---|---|
| 1-1/4" (31.75 mm) | 1650 ft.-lb. (228 m-kg) | 1750 ft.-lb. (242 m-kg) | 2100 ft.-lb. (290 m-kg) |
| 1-1/2" (31.1 mm) | 2600 ft.-lb. (360 m-kg) | 2850 ft.-lb. (394 m-kg) | 3350 ft.-lb. (463 m-kg) |
| 1-3/4" (44.45 mm) | 4650 ft.-lb. (643 m-kg) | 5050 ft.-lb. (698 m-kg) | 5950 ft.-lb. (822 m-kg) |

NOTE: Grade 7 bolts are identified by 5 radial lines on the head. Grade 8 bolts are identified by 6 radial lines on the head. Grade ISO 12.9 bolts are identified by the use of a 12 point head. To develop uniform bolt torque, all bolts should be tightened in three steps. Bolt torques are based on clean, properly lubricated threads.

6. Install swing bearing lubrication hoses.

7. Complete crane installation in accordance with applicable installation drawing(s).

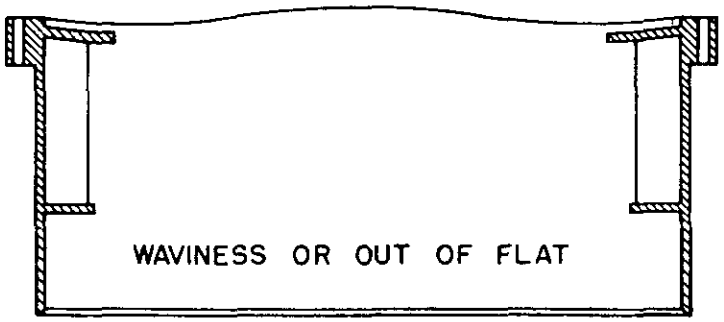


FIGURE 1

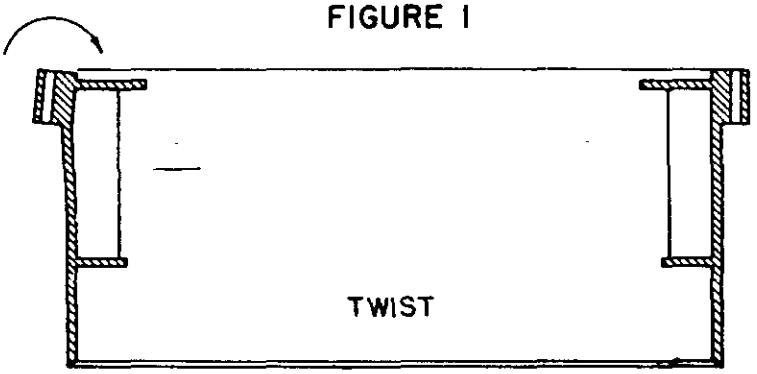


FIGURE 2

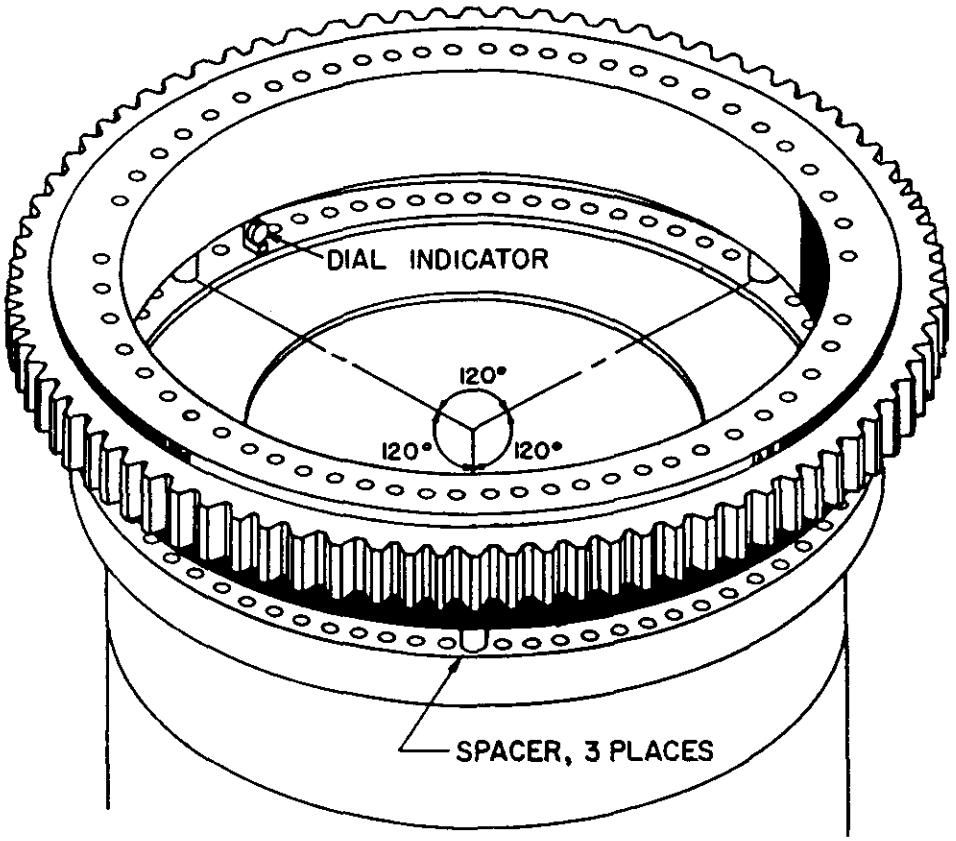


FIGURE 3

LT-160089

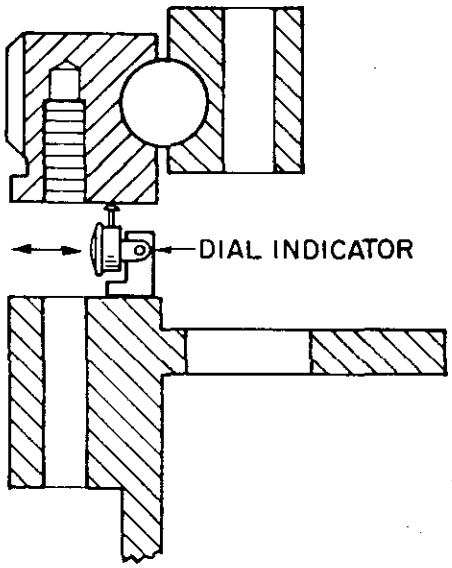


FIGURE 4

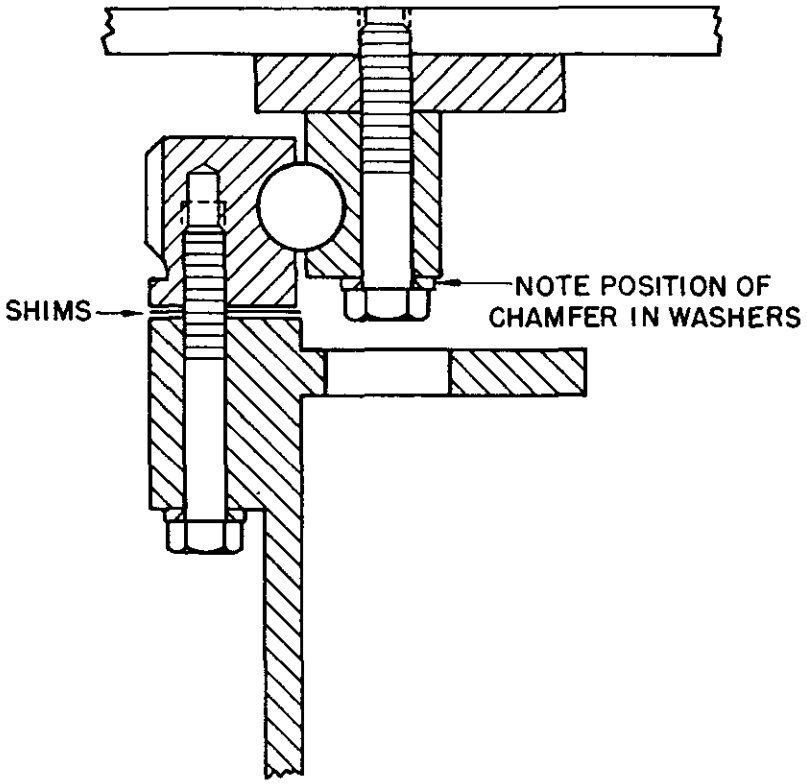


FIGURE 5
( TYPICAL EXAMPLE )

LT-160090

# TECHNICAL STANDARDS

ARMCO National Supply Division
Armco Steel Corporation
GAINESVILLE, TEXAS

| EFFECTIVE DATE | NO. TD-16003 |
|---|---|
| 2-23-79 | PAGE 1 of 1 |

| PREPARED BY | APPROVED BY |
|---|---|
| W.E.R. | |

SUBJECT PROCEDURE FOR APPLYING LOCTITE RETAINING COMPOUND #35 TO PRESS OR INTERFERENCE FITTED PARTS TO INCREASE JOINT RELIABILITY

## PROCEDURE FOR ASSEMBLING PINS AND PLANET GEARS

This procedure is for applications where press or interference fitted parts are given added joint reliability by use of Loctite RETAINING COMPOUND 35. It is specifically applicable to the following listed crane planet gear assemblies:

| | | |
|---|---|---|
| OS-105 | Main, Whip & Boom Hoists | Second Stage Only |
| OS-215 | Main & Whip Hoist | Second Stage Only |
| | Boom Hoist | First & Second Stages |
| OS-435 | Main, Whip & Boom Hoists | First & Second Stages |

A small oven or oxy-acetylene torch will be needed to heat the crane planet gears.

PROCEDURE:

1. Throughly clean the gears and pins to be assembled in CLEAN solvent. Blow the parts dry being careful not to touch the surfaces to be bonded with hands or dirty rags as contamination could result.

2. Rinse pins and gears with a degreasing solvent such as Loctite Partsaver brand Safety Solvent, trichlorethylene, or a non petroleum base lacquer thinner being careful not to contaminate the surfaces to be bonded. Let parts dry by evaporation. Test for clean surfaces by putting cool water on the parts. Parts are sufficiently clean if the water covers the part in a film. If water puddles or forms beads resulting in dry spots, use fresh solvent and reclean and let dry.

3. Coat surfaces to be bonded on both pins and gears with a thin film of Loctite Locquic Primer T and allow to dry.

4. Heat the gears to 300-350°F (149-177°C). This may be done in an oven or by placing the gears on a steel plate and applying heat to the underside of the plate with an oxy-acetylene torch. When using the plate and torch the gears must be turned periodically to assure the temperature will be uniform through-out the gear. The temperature of the gears may be checked with "Temp-Sticks".

5. Install bearings in the side of the planet carrier with the "cast in" retainer. Position the planet carrier with the installed bearings down and shim-up under the bearings so that the pin will not drop past the end of the bearing when assembled. Do Not pass Loctite coated area on pins through the bearings.

6. Apply a thin coating of Loctite "Retaining Compound #35" (green in color) to the primed pins in the area to be covered by the gear. Be careful not to contaminate surface to be bonded.

7. Remove one heated gear from the oven or plate and position it in the planet carrier so that the bore of the gear and bearing are in line. Then quickly drop a coated pin through the gear and bearing. Make sure the pin does not protrude past the end of the bearing. Repeat this step for each remaining gear.

8. Let the assemblies cool completely. Then install the remaining bearings being careful not to misalign them as this could cause damage to the bearings.

Sales & Service

# bulletin

Gainesville Plant

# National Hydraulic Pedestal Cranes
# Windshield Wiper Air Motors

Pedestal Crane Service Bulletin No. 10
September 1979

The air motor currently used to power windshield wipers on National pedestal cranes has been discontinued by the manufacturer. The installation of the replacement air motor requires only minor modifications to the operator's cab. However, the replacement motor requires several parts not required on the original motor.

The figures on the reverse side of this page and parts list below should be retained as the parts list for the replacement air motor and associated components. The motor and components are available in a kit. To replace the top air powered wiper on all OS-105, OS-435 and OS-215 models, order kit part number G-X16-2101-TOP. To replace the front wiper on all OS-105 models and all OS-435 and OS-215 models with serial numbers above 230, order kit part number G-X16-2101-FRP. To replace the front wiper on all OS-215 and OS-435 models with serial numbers 230 and below, order kit part number G-X-16-2101-FRT.

NOTE: Electrically powered windshield wipers can be replaced by the above kits provided new arms (part number 7800020) and new blades (part number 7801171 [18"] for front windshield or part number 7801170 [16"] for top windshield) are ordered in addition to the kits. Copies of drawing G-X16-2101 can be provided upon request to assist with the installation of the kits.

| | | | REQ'D. | | |
|---|---|---|---|---|---|
| ITEM | PART NUMBER | DESCRIPTION | -TOP | -FRP | -FRT |
| 1 | G-7800023-001 | ARM | 0 | 1 | 0 |
| 2 | G-7800023-002 | DRIVER | 0 | 1 | 0 |
| 3 | G-7800023-003 | GASKET | 0 | 1 | 0 |
| 4 | G-7800023-004 | NUT | 0 | 1 | 0 |
| 5 | G-7800023-005 | SPACER | 0 | 1 | 0 |
| 6 | G-7801173 | BLADE | 0 | 1 | 0 |
| 7 | G-7802337 | QUICK DISCONNECT | 0 | 0 | 2 |
| 8 | G-7812050-001 | MOTOR | 1 | 1 | 1 |
| 9 | G-7812050-002 | VALVE | 1 | 1 | 1 |
| 10 | G-7815244-001 | PLATE, (Short) | 1 | 0 | 0 |
| 11 | G-7815244-002 | PLATE, (Medium) | 0 | 1 | 0 |
| 12 | G-7815244-003 | PLATE, (Long) | 0 | 0 | 1 |
| 13 | G-7818350-001 | SHAFT, (Short) | 1 | 0 | 0 |
| 14 | G-7818350-002 | SHAFT, (Medium) | 0 | 1 | 0 |
| 15 | G-7818350-003 | SHAFT, (Long) | 0 | 0 | 1 |
| 16 | 6300001 | NUT, #10-24 | 2 | 2 | 4 |
| *17 | 6806001 | COUPLING, 1/8" NPT | 1 | 0 | 1 |
| *18 | 6806002 | COUPLING, 1/4" NPT | 1 | 0 | 1 |
| 19 | 6817001 | NIPPLE, 1/8" NPT | 1 | 1 | 0 |
| 20 | 7051079-01 | SCREW, #8-32 x 3/4" | 0 | 2 | 0 |
| 21 | 7053092-13 | SCREW, #10-24 x 3/4" | 2 | 2 | 4 |
| 22 | 7619025 | WASHER, #10 Lock | 2 | 2 | 4 |
| 23 | 7804220 | ELBOW | 1 | 1 | 2 |
| 24 | 7802477 | CONNECTOR | 3 | 2 | 2 |
| 25 | 7819106-0 | TUBING | 3' | 1' | 10' |
| 26 | Not Supplied | Fabricate as required | 0 | 0 | 1 |
| 27 | Not Supplied | Fabricate as required | 0 | 0 | 2 |

*Not Shown

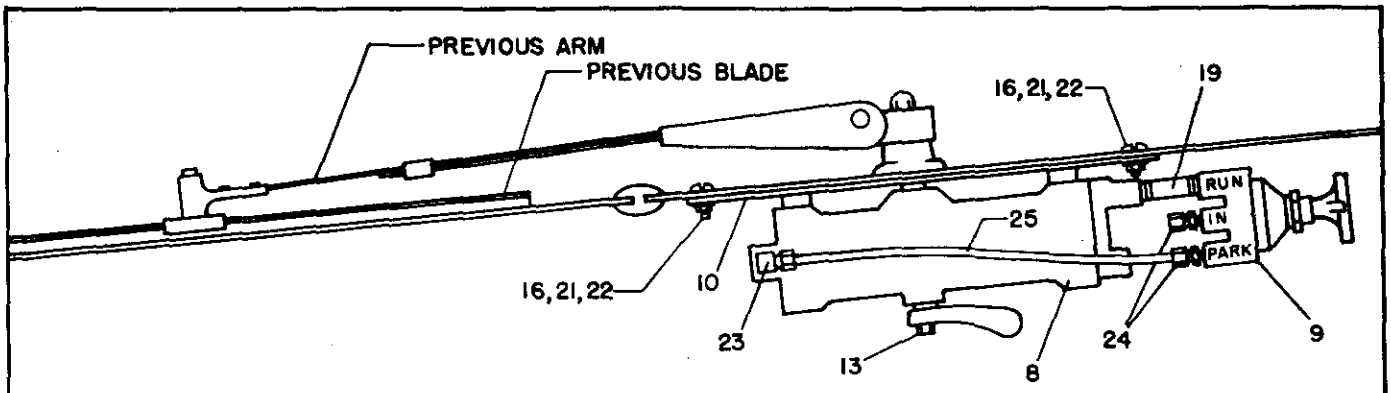


G-X16-2101-TOP

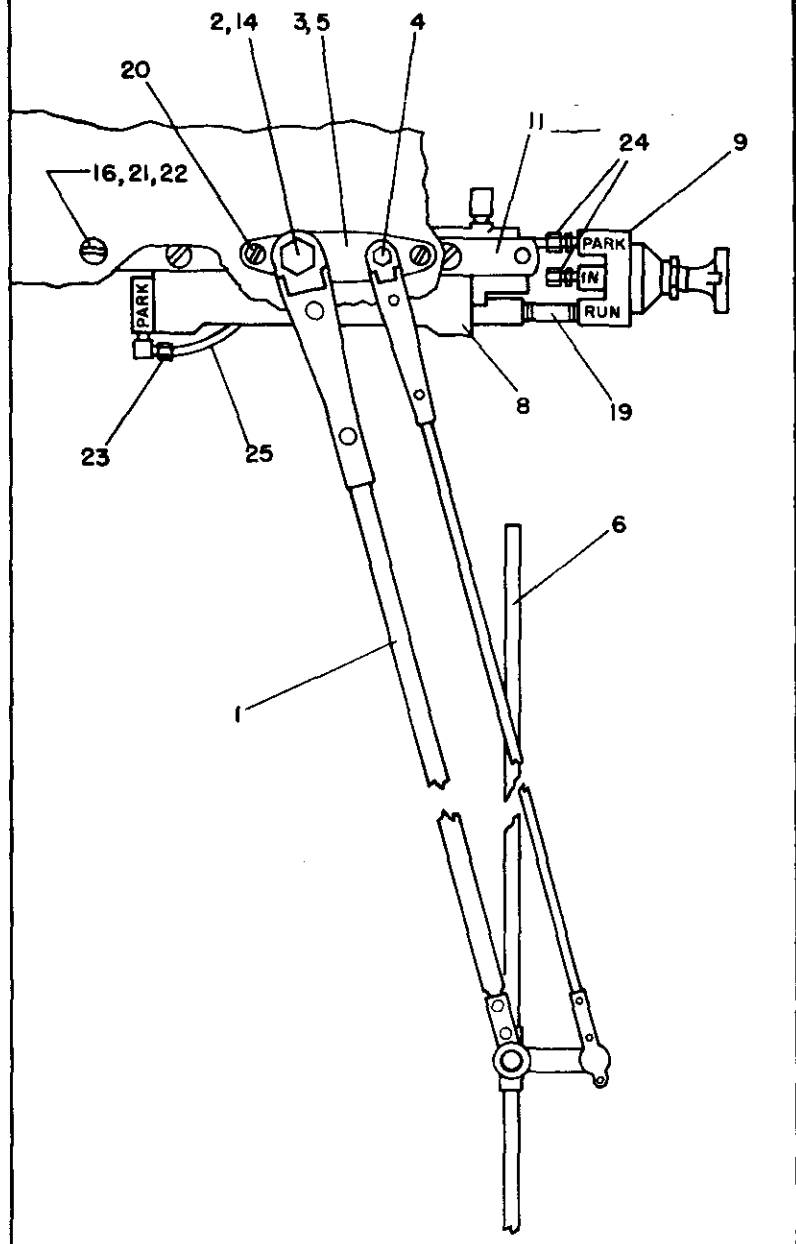


G-X16-2101-FRP

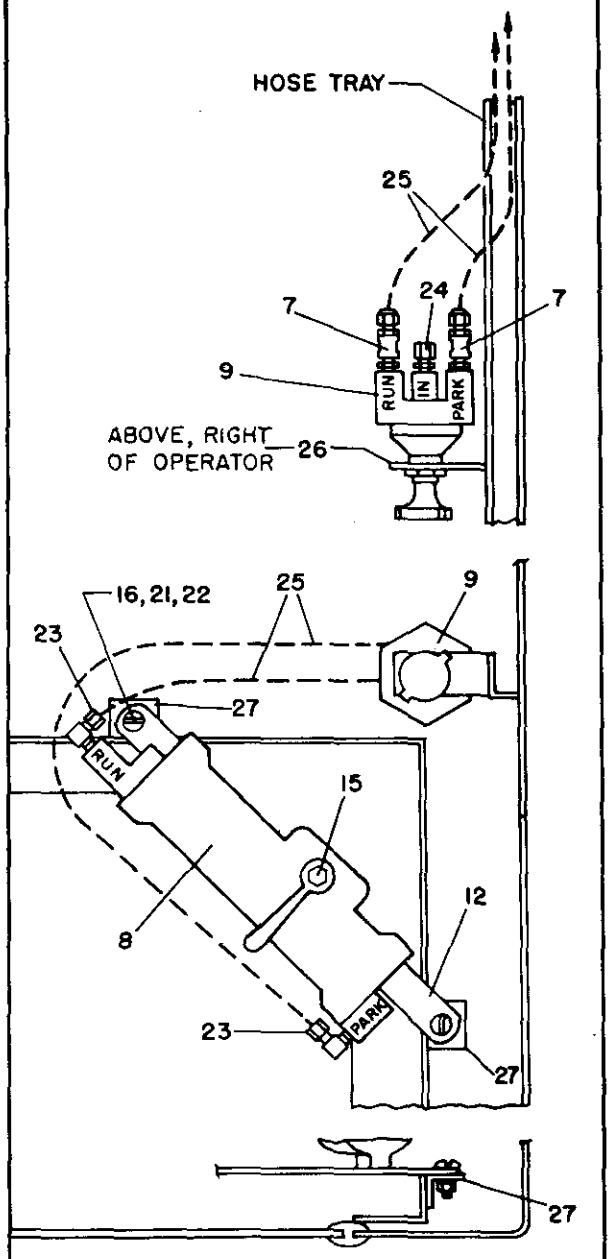


G-X16-2101-FRT

Sales & Service

**bulletin**

Gainesville Plant

# National Hydraulic Pedestal Cranes

# Hydraulic Pump and Motor Repair

Pedestal Crane Service Bulletin No. 9
June 1979

The hydraulic pumps and motors used for the hoist and swing functions of NATIONAL's OS-435 (with single pinion swing drive), OS-215, OS-105 and H-65A cranes require special techniques and equipment to be properly remanufactured. Repairs not requiring the removal of the housing end cap or front cover may be undertaken in the field by a consientious mechanic. However, repairs requiring the removal of the housing end cap or front cover should be referred to a competent representative of the hydraulic unit manufacturer. Partial or complete repairs to the rotating components are no longer recommended to be performed in the field. NOTE: Replacement units on-hand will permit a change out and repair program which minimizes the time the crane is out of service.

The following table is a guide to identify and label pumps and motors to have them remanufactured. CAUTION: Pumps and motors should always be labeled with current identifying numbers. Additional information is available on request.

| MODEL OS-435 | | |
|---|---|---|
| UNIT | NSCO PART NO. | SUNSTRAND MODEL NO. |
| Main/Whip Pump | 1612927 | 26-2014 |
| Boom Pump (Thru S/N 193) | 1612927 | 26-2014 |
| Boom Pump (Above S/N 193) | 1613930 | 26-2020 |
| Swing Pump | 1612928 | 23-2136 |
| Main or Whip Motor | 1612204 | 26-4009 |
| Boom Motor | 1612205 | 26-3007 |
| Swing Motor | 1612206 | 24-3021 |

| MODEL OS-215 | | |
|---|---|---|
| UNIT | NSCO PART NO. | DYNAPOWER PART NO. (DRAWING NO.) |
| Main/Whip & Boom Pump | 7815256 | 895427/892913 (825400/822902) |
| Swing Pump | 7815255 | 895169/892806 (825160/822565) |
| Boom Motor * | 1607259* | 896421-50-15 (821851) |
| Main or Whip Motor * | 1607289* | 896421-50-15 (821851) |
| Swing Motor | 7812039 | 896108-45 (826101) |

| MODEL OS-105 | | |
|---|---|---|
| UNIT | NSCO PART NO. | SUNDSTRAND MODEL NO. |
| Main/Whip Pump | 7815258 | 23-2144 |
| Boom & Swing Pump | 7815257 | 22-2134 |
| Hoist Motors | 7812044 | 24-3036 |
| Swing Motor | 7812042 | 23-3056 |

| MODEL H-65A | | |
|---|---|---|
| UNIT | NSCO PART NO. | PART OR MODEL NO. (DRAWING NO.) |
| Main Pump ** | 1600298** | Dynapower 896423-40/892902 (811901 Sht. 1 of 2) |
| Swing Pump | 1600913 | Dynapower 896068/892629 (816075) |
| Charge Pump | 1600912 | Hydreco 3035A1A1AR |
| Two Speed Hoist Motor | 1600594 | Dynapower 896437-40/898902 (811904 Sht. 1 of 2) |
| Single Speed Hoist Motor | 1600550 | Dynapower 896420 (811859 Sht. 1 of 2) |
| Swing Motor | 1600393 | Sunstrand 21-3031 |

NOTE:

* The boom, main and whip hoists of the OS-215 all use the same basic motor (NSCO part no. 7812040). This motor has the high pressure relief valve cartridges exchanged to be made into a 1607259 motor (boom hoist motor) and the modifications shown on page B-4 of the Jan. 1975 OS-215 parts list to be made into a 1607289 motor (main and whip hoist motor).

** A 1600298 main pump requires the modifications shown on page B-17 of the February 1976 H-65A parts list before being placed into service.

Sales & Service

**bulletin**

Gainesville Plant

# National Hydraulic Pedestal Crane
# OS-105 Boom Hoist Winch

PEDESTAL CRANE SERVICE BULLETIN NO. 11
AUGUST 1980

INSTALLATION OF A SPACER BETWEEN THE BOOM HOIST WINCH LEFT HAND END PLATE AND THE BOOM HOIST WINCH HOUSING

This service bulletin applies to OS-105 cranes up through and including serial number G-266.

In order to eliminate excessive bearing preloading and prevent premature boom hoist winch support bearing failure a spacer must be installed between the boom hoist winch left hand end plate and the boom hoist winch housing.

The procedure for installing the spacer is as follows:

1. Place the boom in its rest and remove the tension from the boom hoist lines.
2. Release the tension on the boom hoist brake by turning the brake adjusting nut counterclockwise.
3. Support the weight of the left hand end (cab side) of the winch.
4. Remove the dipstick and disconnect the hose to the breather.
5. Remove the six 3/4" bolts holding the left hand end plate to the winch housing and remove the left hand end plate.
6. Re-assemble in the reverse order, installing the spacer (NSC part number G-1617525) and longer cap screws (NSC part number 7000441-11) as shown on the following page. New lock washers should also be fitted (NSCO part number 7619066).
7. Re-adjust the boom hoist brake (see Operator's Manual for procedure).

The parts will be supplied at no cost. However, it will be necessary to issue a purchase order to the National Supply Company for the following pieces.

| QTY. | NSC PART NUMBER | DESCRIPTION |
|---|---|---|
| 1 | G-1617525 | Spacer |
| 6 | 7000441-11 | Screw, Hex Head Cap 3/4" x 2-1/4", Grade 5, Cadmium Plated |
| 6 | 7619066 | Washer, 3/4" Regular Spring Lock, Cadmium Plated |

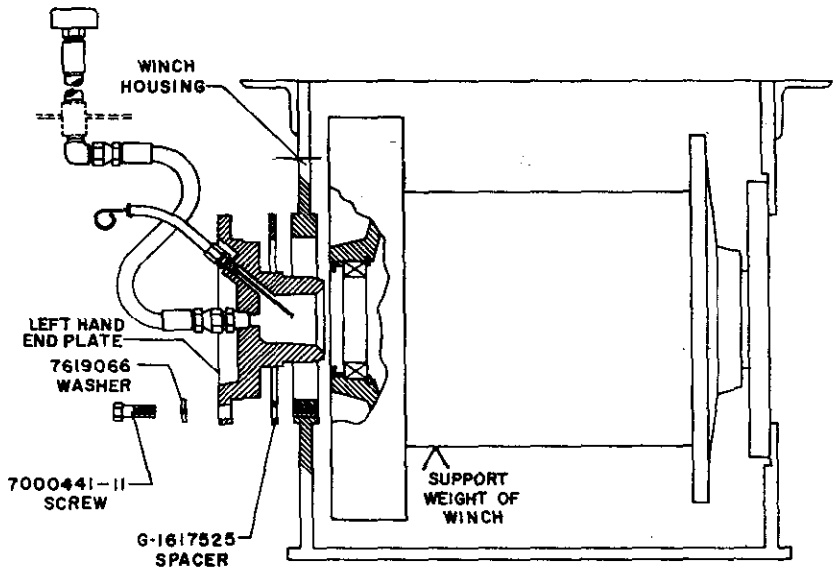
WINCH HOUSING
LEFT HAND END PLATE
7619066 WASHER
7000441-11 SCREW
G-1617525 SPACER
SUPPORT WEIGHT OF WINCH

Sales & Service

# bulletin

Gainesville Plant

# Inspection of Hoist Brake Linkage Pin 1610832 Model OS-215 and Model OS-435

Pedestal Crane Service Bulletin No. 12
September 1980

A review of the design of the hoist brake linkage pin, 1610832 (shown in the figure below), has revealed the need to replace a number of pins currently in service. An analytical and experimental examination indicates an abnormally high unit stress can readily occur in the pins with a nominal center diameter of 1-7/8 inches (47.6 mm). All three 1610832 pins used on each National model OS-435 and model OS-215 crane should be inspected. If the pins are of the August 1975 design with a nominal diameter of 1-7/8 inches (47.6 mm), the pins should be replaced as soon as possible. Replacement pins of an improved design and higher strength material and new support bearing inner races will be provided at no cost. However, it will be necessary to issue a purchase order to National Supply Company and specify the quantity of replacement 1610832 pins required. Two new bearing inner races, part number ZB-1771, should be ordered for each pin ordered.

If the inspection of the pins reveals pins of a nominal diameter of 2 inches (50.8 mm), the pins may be left in service provided special attention is given not to overtighten the linkage when adjusting the brakes. A brake linkage is properly adjusted when the brake cylinder rod travels approximately 1/4" (6.3 mm) from the brake "on" position to the brake "off" position.

Note: Total brake cylinder rod travel is limited to 1-1/8 inches (28.6 mm).

WARNING: Overtightening of the brake linkage can cause excessive stresses in the 1610832 pins which are not of the improved design and higher strength material.

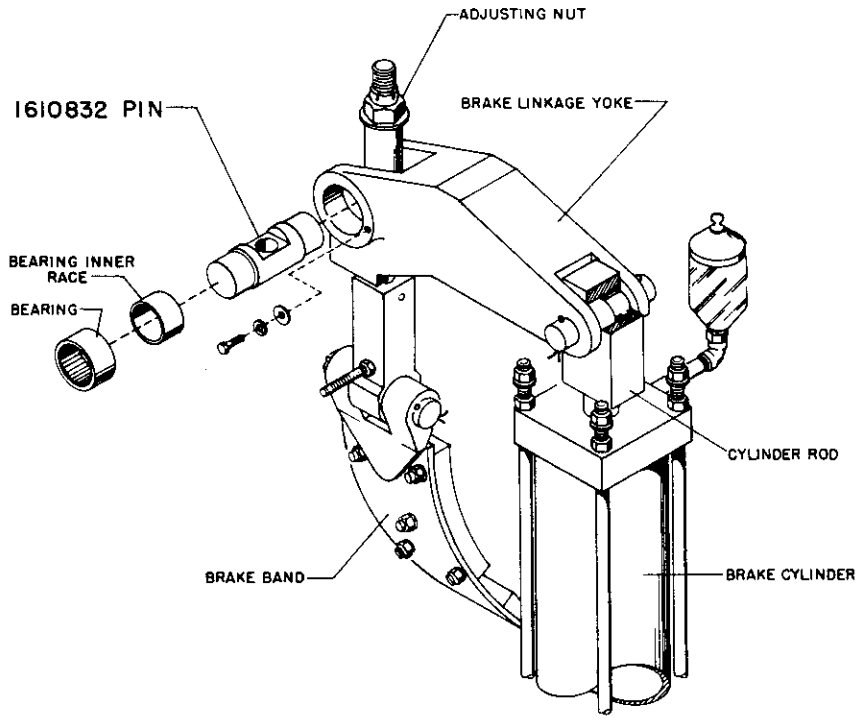


BRAKE LINKAGE

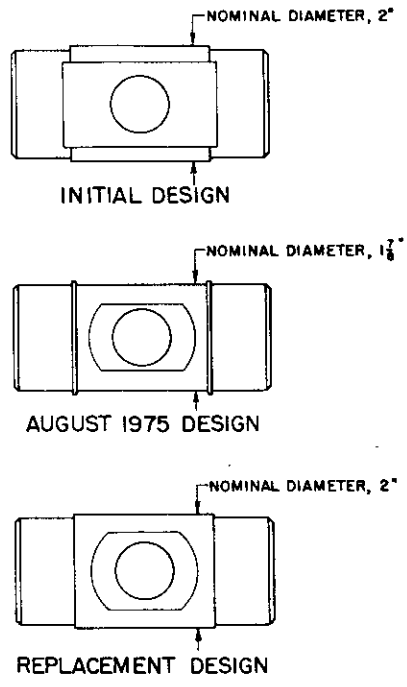


LT-160315

# NATIONAL-OILWELL

## EXECUTIVE OFFICE:

**HOUSTON HEADQUARTERS**
5555 San Felipe
Houston, TX 77056
P.O. Box 4638
Houston, TX 77210-4638
**PHONE: 713/960-5100**
Fax: 713/960-5428

## MANUFACTURING PLANTS:

**HOUSTON PLANT**
11919 FM 529 Road
Houston, TX 77041
**PHONE: 713/849-8000**

**MCALESTER WORKS**
501 N. George Nigh Expressway
(Hwy. 69 Bypass North)
McAlester, OK 74501
**PHONE: 918/423-8000**

**KILGORE FAB CENTER**
East Texas Fabrication Center
104 Powderhorn Road
Kilgore, TX 75662
**PHONE: (903) 983-1505**

## SALES OFFICES

ANCHORAGE, AK
PHONE: 907/522-3727
BAKERSFIELD, CA
PHONE: 805/589-5750
CASPER, WY
PHONE: 307/235-2751
DALLAS, TX
PHONE: 214/265-8840
DENVER, CO
PHONE: 303/298-8112
HOUSTON, TX
PHONE: 713/960-5100
LONG BEACH, CA
PHONE: 310/998-4900
LOS ANGELES, CA
PHONE: 310/802-2638
MIDLAND, TX
PHONE: 915/684-5576
NEW ORLEANS, LA
PHONE: 504/586-1301
ODESSA, TX
PHONE: 915/332-9472
OKLAHOMA CITY, OK
PHONE: 405/632-7600
RIO VISTA, CA
PHONE: 707/374-2580
TULSA, OK
PHONE: 918/492-5580
VENTURA, CA
PHONE: 805/653-6670
WICHITA, KS
PHONE: 316/262-4557
WILLISTON, ND
PHONE: 701/572-3781

## UNITED STATES STORES

ANCHORAGE, AK
PHONE: 907/522-3727
ANDREWS, TX
PHONE: 915/523-2954
BAKER, MT
PHONE: 406/778-3378
BAKERSFIELD, CA
PHONE: 805/589-5750
BIG LAKE, TX
PHONE: 915/884-2556
BIG PINEY, WY
PHONE: 307/276-3916
BIG SPRING, TX
PHONE: 915/267-2539
BILLINGS, MT
PHONE: 406/252-7771
BRADFORD, PA
PHONE: 814/368-4127
BROOKHAVEN, MS
PHONE: 601/833-6511
BRYAN, TX
PHONE: 409/778-1585
CAMERON, LA
PHONE: 318/775-7078
CASPER, WY
PHONE: 307/235-2751
CHARLESTON, WV
PHONE: 304/342-5193
CHEYENNE WELLS, CO
PHONE: 719/767-8801
CLAY CITY, IL
PHONE: 618/676-1653
CORPUS CHRISTI, TX
PHONE: 512/883-0871
CORTEZ, CO
PHONE: 303/565-8428
CROSSVILLE, IL
PHONE: 618/966-2165
CUT BANK, MT
PHONE: 406/873-2227
DENVER CITY, TX
PHONE: 806/592-2161
DICKINSON, ND
PHONE: 701/227-0861
ELK CITY, OK
PHONE: 405/225-7150
ELLINWOOD, KS
PHONE: 316/564-2320
EVANSTON, WY
PHONE: 307/789-2034
FT LUPTON, CO
PHONE: 303/857-6242
FT. SMITH, AR
PHONE: 501/646-1672
FREER, TX
PHONE: 512/394-6115
GILLETTE, WY
PHONE: 307/682-9337
GREAT BEND, KS
PHONE: 316/793-8433
HARTSHORNE, OK
PHONE: 918/297-2578
HARVEY, LA
PHONE: 504/366-6426
HENDERSON, KY
PHONE: 502/826-5774
HOBBS, NM
PHONE: 505/393-3138
HOMINY, OK
PHONE: 918/885-2108
HOUMA, LA
PHONE: 504/872-6876
HOUSTON, TX
PHONE: 713/675-6661
KALKASKA, MI
PHONE: 616/258-8712
KENAI, AK
PHONE: 907/283-6080
KENEDY, TX
PHONE: 210/583-3355
KILGORE, TX
PHONE: 903/984-3043
LAREDO, TX
PHONE: 210/722-0581
LAUREL, MS
PHONE: 601/649-8671
LIBERAL, KS
PHONE: 316/642-2518
LINDSAY, OK
PHONE: 405/756-3147
LONG BEACH, CA
PHONE: 310/988-4900
MCALLEN, TX
PHONE: 210/686-4329
MCCOOK, NB
PHONE: 308/345-2210
MOBILE, AL
PHONE: 205/479-0100
MOHALL, ND
PHONE: 701/756-6834
MONAHANS, TX
PHONE: 915/943-4351
MORGAN CITY, LA
PHONE: 504/384-0810
MT. CARMEL, IL
PHONE: 618/262-4148
MT. PLEASANT, MI
PHONE: 517/773-9948
NATCHEZ, MS
PHONE: 601/446-8513
NESS CITY, KS
PHONE: 913/798-3607



PRINTED IN U.S.A.

## UNITED STATES STORES

NEW IBERIA, LA
PHONE: 318/364-7251
ODESSA, TX
PHONE: 915/337-3541
OKLAHOMA CITY, OK
PHONE: 405/632-7600
PAINTSVILLE, KY
PHONE: 606/789-3791
PAMPA, TX
PHONE: 806/669-7321
PEARSALL, TX
PHONE: 210/334-8961
PENNSBORO, WV
PHONE: 304/659-2993
PLAINVILLE, KS
PHONE: 913/434-4624
POWELL, WY
PHONE: 307/754-2294
PUNXSUTAWNEY, PA
PHONE: 814/938-3060
RATLIFF CITY, OK
PHONE: 405/856-3264
RIVERTON, WY
PHONE: 307/856-6533
ROCK SPRINGS, WY
PHONE: 307/362-3745
SABINE PASS, TX
PHONE: 409/971-2449
SHIDLER, OK
PHONE: 918/793-2781
SHREVEPORT, LA
PHONE: 318/221-5214
SNYDER, TX
PHONE: 915/573-2663
SUNDOWN, TX
PHONE: 806/229-3701
VENICE, LA
PHONE: 504/534-9671
VENTURA, CA
PHONE: 805/653-6666
VERNAL, UT
PHONE: 801/789-1104
VICTORIA, TX
PHONE: 512/575-2345
WATFORD CITY, ND
PHONE: 701/842-2902
WILLISTON, ND
PHONE: 701/572-3781
WOODLAND, CA
PHONE: 916/662-1034

## INTERNATIONAL DISTRIBUTORS

NATIONAL-OILWELL CANADA LTD.
CANADA
MAIN SALES OFFICE:
2300 BOW VALLEY SQUARE III
255 - 5TH AVENUE S.W.
CALGARY, ALBERTA
CANADA T2P 3G6
**PHONE: (403) 294-4500**
FAX: (403) 262-9166

NATIONAL-OILWELL
DE VENEZUELA, C.A.
HEADQUARTERS:
APARTADO 1146, 4001-A
CALLE 158 CON AVENIDA 68
AMPLIACION ZONA INDUSTRIAL
MARACAIBO, EDO. ZULIA,
VENEZUELA
**PHONE: (011-58-61) 361850**
FAX: (011-58-61) 362561

NATIONAL-OILWELL, INT'L
UNITED STATES
MAIN SALES OFFICE:
5555 SAN FELIPE
HOUSTON, TX 77056
P.O. BOX 4638
HOUSTON, TX 77210-4638
**PHONE: 713/960-5100**
FAX: 713/960-5428

NATIONAL-OILWELL (U.K.) LTD.
MACHINERY CENTRE:
BADENTOY ROAD
BADENTOY INDUSTRIAL PARK
PORTLETHEN, ABERDEEN
SCOTLAND AB1 4YA
**PHONE: (011-44-1224) 783-060**
FAX: (011-44-1224) 783-266

NATIONAL-OILWELL PTE. LTD.
SOUTHEAST ASIA SALES OFFICE:
MACHINERY AND SERVICE CENTRE
12 GUL AVENUE, JURONG
SINGAPORE 2262
**PHONE: (011-65) 861-1566**
FAX: (011-65) 861-0796

**NATIONAL-OILWELL**
P.O. BOX 4638
HOUSTON, TEXAS 77210-4638

BC: 4/96

PRINTED IN U.S.A.